TABLE OF CONTENTS

TABLE OF CONTENTS

Page

LIST OF TABLES.....ix

LIST OF FIGURES.....xi

SECTION 1 - STORM WATER MANAGEMENT POLICY

1.1 INTRODUCTION..... 1-3

1.2 AUTHORITY FOR REGULATIONS..... 1-3

1.3 ADMINISTRATIVE POLICY..... 1-3
- 1.3.1 Approvals..... 1-3
- 1.3.2 Manual Revisions..... 1-3
- 1.3.3 Design Requirements..... 1-4
- 1.3.4 Financial Responsibility..... 1-4

1.4 DESIGN POLICY..... 1-4
- 1.4.1 Qualifications..... 1-4
- 1.4.2 Computations..... 1-4
- 1.4.3 Drainage Systems and Design Storm Frequencies..... 1-4
  - Design Storm Provisions..... 1-5
  - Major Storm Provisions..... 1-5
- 1.4.4 Hydrologic Analysis..... 1-5
  - Areas Under 200 Acres..... 1-5
  - Areas Over 200 Acres..... 1-6
- 1.4.5 Accuracy..... 1-6
- 1.4.6 Computer Models..... 1-6
- 1.4.7 Open Drainage Channels..... 1-7
- 1.4.8 Tailwater..... 1-7
- 1.4.9 Coordination of Planning Efforts..... 1-7
- 1.4.10 Use of Streets and Alleys..... 1-8
- 1.4.11 FEMA National Flood Insurance Program..... 1-10
- 1.4.12 Erosion and Sediment Control..... 1-10
- 1.4.13 Storm Water Transfer..... 1-10
- 1.4.14 Detention and Retention..... 1-11
- 1.4.15 Storm Water Runoff Quality..... 1-11
- 1.4.16 Drainage Plan Requirements..... 1-12
- 1.4.17 Drainage Plan Submittal Standards..... 1-12
- 1.4.18 Operations and Maintenance..... 1-13

Page

SECTION 2 - STORM WATER RUNOFF

2.1 INTRODUCTION 2-3

2.2 RATIONAL METHOD 2-3
- 2.2.1 Runoff Coefficient, C 2-4
- 2.2.2 Rainfall Intensity, i 2-7
- 2.2.3 Time of Concentration, t_c 2-7
- Overland Flow 2-8
- Storm Sewer or Street Gutter Flow 2-9
- Channel Flow 2-9

2.3 SOIL CONSERVATION SERVICE METHODS 2-11
- 2.3.1 Soil Conservation Service Runoff Curve Number 2-11
- 2.3.2 Time of Concentration 2-12
- 2.3.3 Peak Flow Calculation 2-12
- Tabular Method 2-14
- Graphical Method 2-15

2.4 HYDROLOGIC MODELS 2-16

2.5 COMPUTERIZED HYDROLOGIC ANALYSIS PACKAGES 2-16

2.6 HEC-1 MODEL 2-17
- 2.6.1 Stream Network Model Development 2-17
- 2.6.2 Rainfall-Runoff Simulation 2-18
- Hypothetical Frequency-Storm Derivation 2-18
- Storm Duration 2-19
- Time Interval 2-19
- Precipitation 2-19
- Areal Adjustment 2-20
- 2.6.3 Interception and Infiltration 2-20
- 2.6.4 Lag Time and Concentration Time 2-21
- 2.6.5 Basin Routing 2-21
- 2.6.6 Assumptions and Limitations of HEC-1 2-22

2.7 BIBLIOGRAPHY 2-23

SECTION 3 - STREET DRAINAGE

3.1 INTRODUCTION 3-3

3.2 EFFECTS OF STORM WATER ON STREET CAPACITY 3-3

Page

3.2.1 Interference Due to Sheet Flow Across Pavement 3-3
Hydroplaning 3-3
Splash 3-4
3.2.2 Interference Due to Gutter Flow 3-4
3.2.3 Interference Due to Ponding 3-5
3.2.4 Interference Due To Water Flowing Across Traffic Lanes 3-5
3.2.5 Effect on Pedestrians 3-5

3.3 DESIGN CRITERIA 3-6
3.3.1 Street Capacity for Design Storm 3-6
Calculating Capacity 3-6
Straight Crowns 3-7
Parabolic Crowns 3-10
3.3.2 Street Capacity for Major Storm 3-15
Calculating Capacity 3-15
3.3.3 Ponding 3-15
Design Storm 3-15
Major Storm 3-15
3.3.4 Cross-Street Flow 3-15
Depth 3-16
Capacity 3-16

3.4 INTERSECTION LAYOUT CRITERIA 3-16
3.4.1 Gutter Capacity, Design Storm 3-16
Pavement Encroachment 3-16
3.4.2 Gutter Capacity, Major Storm 3-17
Allowable Depth and Inundated Area 3-17
Capacity 3-17
3.4.3 Ponding 3-17
Design Storm 3-17
Major Storm 3-17

3.5 BIBLIOGRAPHY 3-18

SECTION 4 - STORM INLETS

4.1 INTRODUCTION 4-3

4.2 INLET TYPES 4-3

4.3 INLET LOCATION 4-5
4.3.1 Spacing of Inlets on Grade 4-5

Page

4.3.2 Spacing of Inlets in a Sump 4-7

4.4 CURB-OPENING INLETS 4-9
4.4.1 Capacity of Curb-Opening Inlets on Grade 4-10
4.4.2 Capacity of Curb-Opening Inlets in a Sump 4-14

4.5 GRATE INLETS 4-17
4.5.1 Capacity of Grate Inlets on Grade 4-17
4.5.2 Capacity of Grate Inlets in a Sump 4-21

4.6 SLOTTED INLETS 4-23
4.6.1 Capacity of Slotted Inlets on Grade 4-23
4.6.2 Capacity of Slotted Inlets in a Sump 4-23

4.7 COMBINATION INLETS 4-24
4.7.1 Capacity of Combination Inlets on Grade 4-24
4.7.2 Capacity of Combination Inlets at Sag Locations 4-26

4.8 BIBLIOGRAPHY 4-27

SECTION 5 - STORM SEWERS

5.1 INTRODUCTION 5-3

5.2 GENERAL CRITERIA 5-4
5.2.1 Frequency of Design Runoff 5-4
5.2.2 Velocities and Grades 5-4
Minimum Grades 5-4
Maximum Velocities 5-5
5.2.3 Pipe Sizes and Material Types 5-5
5.2.4 Manhole Location 5-6
5.2.5 Pipe Connections 5-6
5.2.6 Alignment 5-7

5.3 FLOW IN STORM SEWERS 5-7
5.3.1 Pipe Flow Charts 5-8
5.3.2 Bernoulli Equation 5-9

5.4 ENERGY GRADIENT AND PROFILE OF STORM SEWERS 5-12
5.4.1 Friction Head Loss 5-13

Page

5.4.2 Minor Head Losses at Structures 5-14
Obstructions 5-15
Expansions and Contractions 5-16

5.5 DESIGN PROCEDURE FOR STORM SEWER SYSTEMS 5-17
5.5.1 Preliminary Design Considerations 5-17
5.5.2 Storm Sewer System 5-18
Determining Type of Flow 5-18
Storm Sewer Pipe 5-19
Junctions, Inlets and Manholes 5-19
Major Storm System 5-20
5.5.3 Inlet System 5-20
5.5.4 Inlet Lateral Pipe Design 5-21
Outlet Control 5-21
Inlet Control 5-23
5.5.5 Storm Sewer System Design by the Rational Method 5-24

5.6 BIBLIOGRAPHY 5-28

SECTION 6 - OPEN CHANNELS

6.1 INTRODUCTION 6-3

6.2 DESIGN CRITERIA 6-3
6.2.1 Design Frequency 6-3
6.2.2 Maintenance Easement 6-4

6.3 TYPES OF CHANNELS 6-4
6.3.1 Natural Channels 6-4
6.3.2 Grass-Lined Channels 6-4
6.3.3 Concrete-Lined Channels 6-4
6.3.4 Rock-Lined Channels 6-5

6.4 CHANNEL DISCHARGE 6-5
6.4.1 Manning's Equation 6-5
6.4.2 Uniform Flow 6-6
6.4.3 Critical Flow 6-6
6.4.4 Gradually Varied Flow 6-8
6.4.5 Rapidly Varied Flow 6-9
Weir Flow 6-9
Hydraulic Jump 6-10

6.5 DESIGN CONSIDERATIONS 6-10

Page

6.6 DESIGN STANDARDS 6-17
6.6.1 Natural Channels 6-17
6.6.2 Grass-Lined Channels 6-18
6.6.3 Concrete-Lined Channels 6-21
6.6.4 Rock-Lined Channels 6-22
6.6.5 Other Channel Linings 6-25

6.7 WATER SURFACE PROFILE ANALYSIS 6-26

6.8 SUPERCRITICAL FLOW 6-27

6.9 FLOOD PROOFING 6-27

6.10 ENERGY DISSIPATORS 6-28
6.10.1 Impact-Type Stilling Basins 6-28
6.10.2 Plunge Pools 6-28
6.10.3 Drop Structures 6-29
6.10.4 Chute Structures 6-30

6.11 FLOW TRANSITIONS 6-31

6.12 RIPRAP 6-31

6.13 SCOUR 6-31

6.14 BIBLIOGRAPHY 6-33

SECTION 7 - CULVERTS AND BRIDGES

7.1 INTRODUCTION 7-5

7.2 CULVERT AND BRIDGE DESIGN CRITERIA 7-5
7.2.1 Design Frequency 7-5
7.2.2 Culvert Discharge Velocities 7-5
7.2.3 Culvert Material Types 7-5
7.2.4 Bridge Openings 7-5

7.3 CULVERT TYPES 7-6
7.3.1 Inlet Control 7-6
7.3.2 Outlet Control 7-9

Page

7.4 CULVERT END TREATMENTS 7-13
7.4.1 Entrance Conditions 7-13
7.4.2 Headwall/Endwall Treatment 7-13
7.4.3 Improved Inlets 7-14

7.5 CULVERT DESIGN WITH STANDARD INLETS 7-14
7.5.1 Culvert Sizing 7-15
Inlet Control 7-16
Outlet Control 7-18
Evaluation of Results 7-20

7.5.2 Design Procedure 7-21
Design Computation Forms 7-21
Invert Elevations 7-22
Culvert Diameter 7-22
Limited Headwater 7-22
Culvert Outlet 7-22
Minimum Slope 7-22

7.6 OTHER INLET TYPES 7-26
7.6.1 Beveled Inlets 7-26
7.6.2 Performance Curves 7-28
Outlet Control Performance Curves 7-28
Inlet Control Performance Curves 7-29
Analyze the Effect of Additional FALL 7-30
Tapered Inlet Face Control Performance Curves 7-31
7.6.3 Tapered Inlet Design 7-32
7.6.4 Dimensional Limitations 7-35
Side-Tapered Inlets 7-35
Slope-Tapered Inlets 7-36

7.7 BRIDGE HYDRAULIC DESIGN 7-43
7.7.1 Design Approach 7-43
7.7.2 Bridge Opening Freeboard 7-43

7.8 BRIDGE HYDRAULIC ANALYSIS 7-43
7.8.1 HEC-2 Model 7-44
7.8.2 HEC-RAS Model 7-45
7.8.3 WSPRO Model 7-45

7.9 LIST OF SYMBOLS 7-46

7.10 BIBLIOGRAPHY 7-49

Page

SECTION 8 - DETENTION BASINS

8.1 INTRODUCTION 8-3

8.2 DETENTION BASIN DESIGN CRITERIA 8-3
- 8.2.1 Design Storm 8-4
- 8.2.2 Principal Outlet Works 8-4
- 8.2.3 Emergency Spillways 8-6

8.3 ON-SITE DETENTION 8-7
- 8.3.1 Parking Lots and Streets 8-7
- 8.3.2 Recreational Areas 8-7
- 8.3.3 Property Line Swales 8-8
- 8.3.4 Road Embankments 8-8
- 8.3.5 On-Site Ponds 8-8
- 8.3.6 Combinations 8-8

8.4 HYDRAULIC DESIGN METHODS 8-9
- 8.4.1 Modified Rational Method Analysis 8-9
- 8.4.2 Hydrograph Procedure for Storage Analysis 8-12
- 8.4.3 Modified Puls Routing Procedure 8-13

8.5 BIBLIOGRAPHY 8-16

SECTION 9 - SEDIMENT AND EROSION CONTROL

9.1 INTRODUCTION 9-3
- Erosion 9-3
- Factors Influencing Erosion 9-3

9.2 STANDARDS FOR EROSION AND SEDIMENT CONTROL 9-4

9.3 THE SEDIMENT CONTROL PLAN 9-6
- 9.3.1 Sediment Control Practices 9-7
- 9.3.2 Drainage Plan 9-7

9.4 STANDARDS FOR STRUCTURAL PRACTICES 9-7
- 9.4.1 Straw Bale Barrier 9-8
- 9.4.2 Silt Fence 9-9
- 9.4.3 Stabilized Construction Entrance 9-12
- 9.4.4 Sediment Basin 9-13
- 9.4.5 Diversion 9-17
- 9.4.6 Grassed Waterway or Outlet 9-20
- 9.4.7 Lined Waterway or Outlet 9-22
- 9.4.8 Riprap 9-24

Page

9.5 STANDARDS FOR VEGETATIVE PRACTICES FOR

CRITICAL AREA STABILIZATION 9-25
Definition 9-25
Purpose 9-25
Application 9-25
Design Criteria 9-25

9.6 BIBLIOGRAPHY 9-28

LIST OF TABLES

Table Page

SECTION 1 - STORM WATER MANAGEMENT POLICY

1-1 Design Storm Runoff Allowable Street Use 1-8
1-2 Major Storm Runoff Allowable Street Inundation..... 1-9
1-3 Allowable Cross Street Flow 1-9

SECTION 2 - STORM WATER RUNOFF

2-1 Recommended Runoff Coefficients..... 2-5
2-2 Suggested Runoff Coefficients for Surface Types 2-6
2-3 Frequency Factors for the Rational Formula 2-6
2-4 Values of N for Use in the Kerby Formula 2-8
2-5 SCS Runoff Curve Numbers for Urban Areas and Other Agricultural Lands..... 2-13
2-6 Depth-Duration-Frequency Data for Temple, Texas..... 2-20

SECTION 3 - STREET DRAINAGE

3-1 Manning's Roughness Coefficients for Streets and Gutters 3-8
3-2 Coefficients for Equation 3-4, Streets Without Curb Split 3-11
3-3 Coefficients for Equation 3-5, Streets With Curb Split - Higher Gutter..... 3-12
3-4 Coefficients for Equation 3-6, Streets With Curb Split - Lower Gutter 3-13

SECTION 4 - STORM INLETS

4-1 Minimum Inlet Capacity Reduction Factors, I_{RF} 4-5
4-2 Distance to Flanking Inlets in Sag Vertical Curve Locations, feet 4-8

SECTION 5 - STORM SEWERS

5-1 Storm Sewer Design Storm Frequency..... 5-4
5-2 Minimum Slope Required for Scouring Velocity..... 5-5
5-3 Maximum Velocity in Storm Sewers..... 5-5
5-4 Roughness Coefficients for Storm Sewers 5-6
5-5 Junction or Structure Minor Loss Coefficient, k_m 5-15
5-6 Head Loss Coefficients Due to Obstructions..... 5-16
5-7 Head Loss Coefficients for Expansions and Contractions 5-17

Table Page

SECTION 6 - OPEN CHANNELS

6-1 Geometric Elements of Channel Sections 6-11
6-2 Composite Roughness Coefficients for Unlined Open Channels 6-12
6-3 Typical Roughness Coefficients for Open Channels 6-13
6-4 Manning's Roughness Coefficients for Straight Channels Without Shrubbery or Trees 6-15
6-5 Maximum Permissible Design Open Channel Flow Velocities in Earth 6-17
6-6 Maximum Permissible Velocities for Earth Channels with Varied Grass Linings and Slopes 6-16

SECTION 7 - CULVERTS AND BRIDGES

7-1 Flow Categories 7-6
7-2 Entrance Loss Coefficients 7-8
7-3 Manning's Roughness Coefficients "n" for Culverts 7-15
7-4 Cross Sectional Area Coefficient, C_a, of a Circular Conduit Flowing Part Full 7-21

SECTION 8 - DETENTION BASINS

8-1 Acceptable Grasses for Vegetated Spillways 8-6
8-2 Development of a $(2S/\Delta t) + O$ versus O Relationships 8-15

SECTION 9 - SEDIMENT AND EROSION CONTROL

9-1 Silt Fence Slope Criteria 9-9
9-2 Silt Fence Fabric Criteria 9-11
9-3 Stabilized Construction Entrance Design Criteria 9-12
9-4 Minimum Top Width Embankment (Earth Fill) 9-16
9-5 Diversion Frequency and Freeboard 9-18
9-6 Selection of Vegetal Retardance 9-19
9-7 Permissible Velocities 9-19
9-8 Permissible Side Slopes for Lined Waterway 9-24

LIST OF FIGURES

Figure Page

SECTION 2 - STORM WATER RUNOFF

2-1 Intensity Duration Frequency Curves, Duration in Minutes 2-25
2-2 Intensity Duration Frequency Curves, Duration in Hours 2-26
2-3 Average Velocities for Travel Time for Shallow Concentrated Flow 2-27
2-4 Example Drainage Basin and Schematic 2-28
2-5 Adjustment of Point Rainfall for Watershed Area 2-29
2-6 Dimensionless Curvilinear Unit Hydrograph and Equivalent Triangular Hydrograph 2-30
2-7 Time of Concentration and Travel Time Worksheet 2-31
2-8 Drainage Area and SCS Curve Number Worksheet 2-32

SECTION 3 - STREET DRAINAGE

3-1 Gutter and Pavement Flow Patterns 3-19
3-2 Flow in Triangular Gutter Sections 3-20
3-3 Flow in Composite Gutter Sections 3-21
3-4 Intersection Drainage 3-22

SECTION 4 - STORM INLETS

4-1 Inlet Types 4-29
4-2 Graphical Definition of Symbols 4-30
4-3 Standard Curb Inlet, Temple, Texas 4-31
4-4 Ratio of Frontal Flow to Total Gutter Flow, E_o 4-32
4-5 Curb-Opening and Slotted Drain Inlet Length for Total Interception, L_T 4-33
4-6 Curb-Opening and Slotted Drain Inlet Interception Efficiency, E 4-34
4-7 Depressed Curb-Opening Inlet Capacity in Sump Locations 4-35
4-8 Curb-Opening Inlet Capacity in Sump Locations 4-36
4-9 Curb-Opening Inlet Orifice Capacity for Inclined and Vertical Orifice Throats 4-37
4-10 Curb-Opening Inlets 4-38
4-11 Grate Inlet Frontal Flow Interception Efficiency, R_f 4-39
4-12 Grate Inlet Side Flow Interception Efficiency, R_s 4-40
4-13 Grate Inlet Capacity in Sump Conditions 4-41
4-14 Slotted Drain Inlet Capacity in Sump Locations 4-42

SECTION 5 - STORM SEWERS

5-1 Uniform Flow for Circular Conduits Concrete n = 0.012 5-29
5-2 Critical Depth for Circular Conduits 5-30
5-3 Velocity for Circular Conduits 5-31

Figure Page

5-4 Discharge Capacity for Concrete Pipe Flowing Full n = 0.012
Pipe Diameters 12" to 54" 5-32
5-5 Discharge Capacity for Concrete Pipe Flowing Full n = 0.012
Pipe Diameters 12" to 132" 5-33
5-6 Energy in Open-Channel Flow and Closed Conduit Flow 5-34
5-7 Minor Head Losses Due to Turbulence at Structures 5-35
5-8 Minor Head Losses Due to Turbulence at Structures 5-36
5-9 Inlet Lateral Definition Sketch Flow Condition 5-37
5-10 Inlet Lateral Pipe Design Outlet Control 12" Diameter Pipe 5-38
5-11 Inlet Lateral Pipe Design Outlet Control 15" Diameter Pipe 5-39
5-12 Inlet Lateral Pipe Design Outlet Control 18" Diameter Pipe 5-40
5-13 Inlet Lateral Pipe Design Outlet Control 21" Diameter Pipe 5-41
5-14 Inlet Lateral Pipe Design Outlet Control 24" Diameter Pipe 5-42
5-15 Inlet Lateral Pipe Design Outlet Control 27" Diameter Pipe 5-43
5-16 Inlet Lateral Pipe Design Outlet Control 30" Diameter Pipe 5-44
5-17 Inlet Lateral Pipe Design Outlet Control 33" Diameter Pipe 5-45
5-18 Inlet Lateral Pipe Design Outlet Control 36" Diameter Pipe 5-46
5-19 Lateral Pipe Design Inlet Control 12" - 36" Diameter Pipes 5-47
5-20 Hydrologic and Hydraulic Computations for Storm Sewers Rational Method 5-49

SECTION 6 - OPEN CHANNELS

6-1 Nomograph for Solution of Manning's Equation 6-35
6-2 Uniform Flow for Trapezoidal Channels 6-36
6-3 Definition Sketch of Specific Head 6-37
6-4 Typical Grassed-Lined Channels 6-38
6-5 Impact-Type Energy Dissipators 6-39
6-6 Rectangular Inclined Drop 6-40
6-7 Control and Pipe Inlet 6-41
6-8 Typical Rectangular Chutes 6-42
6-9 Stilling Pool on Pipe Chute 6-43
6-10 Channel Transition Types 6-44

SECTION 7 - CULVERTS AND BRIDGES

7-1 Types of Inlet Control 7-51
7-2 Types of Outlet Control 7-52
7-3 Culvert Capacity Standard Circular RCP, Square Entrance 18" to 66" 7-53
7-4 Culvert Capacity Standard Circular RCP, Square Edged Entrance 60" to 180" 7-54
7-5 Culvert Capacity Circular RCP, Groove-Edged Entrance 18" to 66" 7-55
7-6 Culvert Capacity Circular RCP, Groove-Edged 60" to 180" 7-56
7-7 Headwater Depth for Box Culverts with Inlet Control 7-57
7-8 Headwater Depth for Concrete Pipe Culverts with Inlet Control 7-58

Figure Page

7-9 Head for Outlet Control Concrete Box Culverts Flowing Full n = 0.012 7-59
7-10 Head for Outlet Control Concrete Pipe Culverts Flowing Full n = 0.012 7-60
7-11 Critical Depth, d_c Circular Pipe 7-61
7-12 Critical Depth, d_c Rectangular Section 7-62
7-13 Culvert Design Form 7-63
7-14 Headwater Depth for Circular Pipe Culverts with Beveled Ring with Inlet Control 7-64
7-15 Headwater Depth for Inlet Control Rectangular Box Culverts 90° Headwall Chamfered or Beveled Inlet Edges 7-65
7-16 Headwater Depth for Inlet Control Single Barrel Box Culvert Skewed Headwalls Chamfered or Beveled Inlet Edges 7-66
7-17 Headwater Depth for Inlet Control Rectangular Box Culvert Flared Wingwalls 18° to 33.7° & 45° with Beveled Edge at Top of Inlet 7-67
7-18 Outlet Control Performance Curves 7-68
7-19 Box Culvert Outlet Control Performance Curves 7-69
7-20 Inlet Control Performance Curves for Various Inlet Configurations 7-70
7-21 Optimization of Performance in Inlet Control 7-71
7-22 Possible Face Design Selection Tapered Inlet 7-72
7-23 Tapered Inlet Design Options for 8 ft x 6 ft Reinforced Box Culvert 7-73
7-24 Tapered Inlet Design Form 7-74
7-25 Mitered Inlet Design Form 7-75
7-26 Headwater Depth for Face Control Box Culverts with Side-Tapered Inlets 7-76
7-27 Headwater Depth for Face Control Box Culvert with Slope-Tapered Inlets 7-77
7-28 Headwater Depth for Face Control Pipe Culverts with Side-Tapered Inlets (Non-Rectangular Section Only) 7-78
7-29 Headwater Depth for Throat Control Box Culverts with Tapered Inlets 7-79
7-30 Headwater Depth for Throat Control Pipe Culverts with Side-Tapered Inlets (Circular Section Only) 7-80

SECTION 8 - DETENTION BASINS

8-1 Parking Lot Detention 8-17
8-2 Property Line Swale 8-18
8-3 Modified Rational Method Analysis Example Problem 2 8-19
8-4 Effects of Onstream and Offstream Reservoir on Storm Runoff Hydrograph 8-20

SECTION 9 - SEDIMENT AND EROSION CONTROL

9-1 Standard Symbols for Soil Erosion and Sediment Control 9-29
9-2 Straw (or Hay) Bale Barrier 9-30
9-3 Silt Fence 9-31

SECTION 1
STORM WATER MANAGEMENT POLICY

Page

1.1 INTRODUCTION 1-3

1.2 AUTHORITY FOR REGULATIONS 1-3

1.3 ADMINISTRATIVE POLICY 1-3
- 1.3.1 Approvals 1-3
- 1.3.2 Manual Revisions 1-3
- 1.3.3 Design Requirements 1-4
- 1.3.4 Financial Responsibility 1-4

1.4 DESIGN POLICY 1-4
- 1.4.1 Qualifications 1-4
- 1.4.2 Computations 1-4
- 1.4.3 Drainage Systems and Design Storm Frequencies 1-4
  - Design Storm Provisions 1-5
  - Major Storm Provisions 1-5
- 1.4.4 Hydrologic Analysis 1-5
  - Areas Under 200 Acres 1-5
  - Areas Over 200 Acres 1-6
- 1.4.5 Accuracy 1-6
- 1.4.6 Computer Models 1-6
- 1.4.7 Open Drainage Channels 1-7
- 1.4.8 Tailwater 1-7
- 1.4.9 Coordination of Planning Efforts 1-7
- 1.4.10 Use of Streets and Alleys 1-8
- 1.4.11 FEMA National Flood Insurance Program 1-10
- 1.4.12 Erosion and Sediment Control 1-10
- 1.4.13 Storm Water Transfer 1-11
- 1.4.14 Detention and Retention 1-11
- 1.4.15 Storm Water Runoff Quality 1-11
- 1.4.16 Drainage Plan Requirements 1-12
- 1.4.17 Drainage Plan Submittal Standards 1-12
- 1.4.18 Operations and Maintenance 1-13

LIST OF TABLES

Table Page

1-1 Design Storm Runoff Allowable Street Use 1-8
1-2 Major Storm Runoff Allowable Street Inundation 1-9
1-3 Allowable Cross Street Flow 1-9

1.1 INTRODUCTION

These policies shall govern the planning, design, construction, operation and maintenance of all storm drainage facilities within the City of Temple and all areas subject to its extraterritorial jurisdiction. Definitions, formulas, criteria, procedures and data presented herein have been developed to support these policies. If a conflict arises between the technical data and these policies, the policies shall govern.

1.2 AUTHORITY FOR REGULATIONS

Cities in Texas have the authority to pass ordinances controlling drainage through the subdivision plat approval process. Cities may impose regulations on developers to regulate runoff from a development and specify stormwater criteria. The authorizations are generally provided in Texas statutes including:

- Home Rule Act: Article 1175
- Extraterritorial Jurisdiction (ETJ): Local Government Code, Chapter 42
- Water Pollution Control and Abatement: Texas Water Code, Chapters 50 and 54
- Subdivision: Local Government Code 212; Property Code, Section 12.002; Article 974a, Sections 1B, 4A, 9A, and 10 as added by Senate Bill 408, Section 1, Acts of the 70th Legislature

1.3 ADMINISTRATIVE POLICY

1.3.1 Approvals

All storm drainage related plans, public and private, must have written approval from the City Engineer or Director of Public Works prior to bidding or beginning construction.

1.3.2 Manual Revisions

Revisions to the Drainage Criteria and Design Manual will be issued in writing and can only be made by the City Engineer or Director of Public Works with approval of the City Council. Design changes or modifications will be summarized in errata sheets and will be distributed as necessary. Major changes affecting policy, criteria, methodologies, or engineering data will be distributed as addenda or as replacement pages at the time the change is adopted. It shall be the responsibility of the Manual user to provide the City with a current address in order to receive written changes. Changes requested by users shall be accompanied by detailed comparative engineering data supporting the reasons and justifications for the change.

1.3.3 Design Requirements

The design criteria presented in the Drainage Criteria and Design Manual represent good engineering practice and should be utilized in the preparation of drainage plans. The criteria are intended to establish guidelines, standards and methods for sound planning and design.

The design criteria shall be revised and updated as necessary to reflect advances in the field of urban drainage engineering, urban water resources management, and as water quality and other regulations change.

The City of Temple and engineers will utilize the Manual in the planning of new facilities and in their reviews of proposed works by developers, private parties, and other governmental agencies.

1.3.4 Financial Responsibility

The City Drainage Policy requires that all drainage structures shall be constructed in such locations and of such size and dimensions to adequately serve the subdivision and associated drainage area. The developer shall be responsible for all costs for the installation of the drainage system required to accommodate the needs of the subdivision being developed, to include the carrying of existing water entering and leaving the subdivision. The developer shall provide for all necessary easements and rights-of-way required for drainage structures in a new subdivision, including storm sewers and open or paved channels.

1.4 DESIGN POLICY

1.4.1 Qualifications

All drainage related plans shall be reviewed and sealed by a Registered Professional Engineer with a valid license from the State of Texas. The Engineer shall attest that the design was conducted in accordance with the Drainage Criteria and Design Manual.

1.4.2 Computations

Computations shall be submitted for review to the City Engineer or Director of Public Works and shall be in accordance with the procedures, standards, and criteria of the Drainage Criteria and Design Manual.

1.4.3 Drainage Systems and Design Storm Frequencies

Every area shall be evaluated for two separate and distinct drainage systems. The first drainage system to be evaluated is the design storm drainage system and the other is the major drainage system as defined below. To provide for orderly urban growth, reduce costs to future generations, and to prevent loss of life and major property damage, both systems must be planned and properly designed and implemented.

Design Storm Provisions

The design storm drainage system is necessary to reduce maintenance costs, to provide protection against regularly occurring storms, to implement an orderly urban system, and to provide convenience to the residents. The design storm drainage system shall be designed to convey the runoff from a 10-year or 25-year return period storm, dependent on the type of drainage system facility. A 10-year storm is one that has a 10% chance of being equalled or exceeded in any given year and a 25-year storm is one that has a 4% chance of being equalled or exceeded in any given year.

Major Storm Provisions

In addition to providing storm drainage facilities for the design storm runoff, provisions shall be made to prevent significant property damage and loss of life from the major storm runoff. These provisions shall be known as the major drainage system. The major storm drainage system shall be designed to accommodate a 100-year return period storm. A 100-year storm is one that has a 1% chance of being equaled or exceeded in any given year. The impact of the major storm shall be investigated and adequate major storm facilities shall be provided. A well-planned major drainage system can reduce the need for design storm drainage systems.

The City Drainage Policy requires all development to include planning, design, and construction of design and major storm drainage systems in accordance with the Drainage Criteria and Design Manual.

There are many developed areas within the City of Temple which do not conform to the drainage standards contained in the Manual. It is recognized that the upgrading of these developed areas to conform to all of the policy, criteria, and standards contained in the Manual will be difficult to obtain, short of complete redevelopment or renewal. Therefore, in the planning of drainage improvements and the designation of floodplains for existing developed areas, the use of the criteria and standards contained in the Manual may be varied or waived as determined by the City Engineer or Director of Public Works in accordance with established variance procedures.

1.4.4 Hydrologic Analysis

The determination of peak runoff magnitude shall be accomplished using either the Rational Method, Soil Conservation Service* methods, HEC-1, or other computer modeling techniques and accepted methods approved by the City Engineer or Director of Public Works. When using HEC-1, the SCS Unit Hydrograph option is preferred.

Areas Under 200 Acres

Design peak discharges for the design and major storm drainage systems for areas less than 200 acres may be computed using the Rational Method.

* Note: Soil Conservation Service is now known as the Natural Resource Conservation Service

Areas Over 200 Acres

Design peak discharges for areas over 200 acres may be computed using the Soil Conservation Service methods, HEC-1, or other approved computer modeling programs. These methods shall be used for designing both the design and major storm drainage systems.

Where hydrographs are needed for flood routing through detention basins and other major drainage systems, they shall be computed using HEC-1, SCS TR-20, or another hydrograph modeling technique approved by the City Engineer or Director of Public Works.

1.4.5 Accuracy

The peak discharges determined by analytical methods are approximations. The drainage system will rarely operate at the design discharge. Flow will always be more or less in actual practice, merely passing through the design flow as it rises and falls. Thus, the engineer should not overemphasize the accuracy of his computed discharges. The Engineer should emphasize the design of a practical and hydraulically balanced system based on sound logic and engineering.

1.4.6 Computer Models

A variety of computer models are available for hydrologic and hydraulic analyses. Approval of the City Engineer or Director of Public Works must be obtained prior to using models other than those specifically identified in the Drainage Criteria and Design Manual. A written request to use an alternative computer model must be submitted to the City Engineer or Director of Public Works prior to its use for a specific case. The request must describe the methodology employed by the alternative computer model and present evidence justifying its use rather than the computer models specifically identified in the Drainage Criteria and Design Manual. Upon receipt of a request, the City Engineer or Director of Public Works shall have 21 working days to approve or disapprove the use of the alternative computer model. If approved, the most recent version of the proposed model must be used.

The City of Temple shall maintain hydraulic computer models of the major streams within the City's jurisdiction as appropriate. Any modifications being proposed by the developer that impact the stream including, but not limited to channel modifications, construction of bridges and culverts, and other measures that may transfer or divert stormwater flow from one point to another shall be incorporated into the City's computer models. It is the responsibility of the developer to obtain the most recent version of the City's stream hydraulic model and incorporate any modifications that are proposed as part of a development. Updated stream hydraulic models reflecting proposed conditions must be submitted to and approved by the City Engineer or Director of Public Works prior to final plat approval.

1.4.7 Open Drainage Channels

Open channels for conveyance of storm water runoff are desirable in urban areas and use of such channels is recommended. Wherever possible, natural drainageways should be used for storm runoff waterways. Consideration should be given to the floodplains and open space requirements of the area.

Natural watercourses, perhaps wet only during and after large rainstorms, generally should not be filled, straightened, or altered significantly. Channelizing a natural waterway tends to reduce natural storage, increase flow velocity and cause higher downstream peaks, often to the detriment of those downstream as well as those adjacent to the channel. Effort must be made to reduce flood peaks and control erosion so that the natural channel is preserved. Therefore, drainage designs which include new or reconstructed drainage channels should be carefully weighed against the environmental and financial considerations of maintaining a natural drainageway.

Open channels should generally follow the natural flowlines and should receive early attention in planning stages of a new development, along with other storm runoff features. Optimal benefits from open channels can often be obtained by incorporating greenbelts with the channel layout.

Open channels shall be designed such that flow is contained within channel banks for the 25-year storm and the lowest finished floor elevation of residential dwellings or public, commercial and industrial buildings shall be no less than one (1) foot above the level of inundation for the major storm event (100-year storm) unless the building is flood-proofed.

ROW shall be dedicated with all drainage channels that are proposed for City ownership and maintenance. This ROW shall include uninterrupted maintenance access with a minimum width of 15 feet and shall be adjacent to the top of the channel. Maintenance access shall not alternate between sides of the channel unless design and construction provide specific accommodation for equipment to cross the channel. Maintenance access shall be cleared and graded to a maximum cross slope of 10%.

1.4.8 Tailwater

The depth of flow in the receiving drainageway must be taken into consideration for backwater computations for both the design and major storm runoff. Backwater computations shall assume a starting elevation greater than or equal to the same return period as the design and major storms, assuming a fully developed watershed.

1.4.9 Coordination of Planning Efforts

The planning for drainage facilities should be coordinated with planning for open space, transportation, utilities, recreation and solid waste collection. By coordinating these efforts, new opportunities can be identified which will assist in the solution of drainage problems. The planning of drainage works in coordination with other urban needs results in more orderly development and lower cost.

Open space may provide significant urban social benefits. Use of natural drainageways is often less costly than constructing and maintaining artificial channels. Combining the open space needs of a community with major drainageways can be a desirable conjunctive use.

The design and construction of new streets, alleys and highways should be fully integrated with drainage needs of the urban area to promote efficient drainage and avoid the creation of flooding hazards.

1.4.10 Use of Streets and Alleys

Streets are significant and important in urban drainage and shall be used for storm runoff up to reasonable limits, recognizing that the primary purpose of streets is for traffic. Limits of the use of streets for conveying storm runoff shall be governed by the design criteria in Table 1-1.

TABLE 1-1 Design Storm Runoff Allowable Street Use

Street Classification	Design Storm	Maximum Pavement Encroachment
Residential Street (31 feet B-B*)	10-year	Flow of water in gutters shall be limited to a flow at the curb of six (6) inches or wherever the street is just covered, whichever is the least depth.
Residential Collector Streets (36 feet B-B*)	10-year	Flow of water in gutters of a residential collector street shall be limited so that one standard lane will remain clear.
Industrial and Arterial Streets (widths above 36 feet B-B*)	25-year	Flow of water in gutters of industrial and arterial streets shall be limited so that two standard lanes will remain clear (at least one lane in each direction).

*Note: B-B is defined as back of curb to back of curb.

When the above maximum encroachment is reached, a separate storm drainage system or additional storm drainage capacity shall be provided, designed on the basis of the design storm. However, construction of the major drainage system is encouraged to quickly drain the design storm runoff from the street.

While it is the intent of this policy to have major storm runoff removed from public streets into major drainageways at frequent and regular intervals, it is recognized that water will often tend to follow streets and roadways. Therefore, streets and roadways often may be aligned so that they will provide a specific runoff conveyance function. Planning and design objectives for the major drainage system with respect to public streets shall be based upon the limiting criteria in Table 1-2.

TABLE 1-2 Major Storm Runoff Allowable Street Inundation

Street Classification	Allowable Depth and Inundated Areas
Residential Street (31 feet B-B*)	Residential dwellings and public, commercial, and industrial buildings shall have a minimum finished floor elevation of not less than one (1) foot above the level of inundation unless buildings are flood-proofed.
Residential Collector Streets (36 feet B-B*) and Industrial, and Arterial Streets (widths greater than 36 feet B-B*)	Residential dwellings and public, commercial, and industrial buildings shall have a minimum finished floor elevation of not less than one (1) foot above the level of inundation unless buildings are flood-proofed. The depth of water at the street crown shall not exceed six (6) inches in order to allow operation of emergency vehicles.

*Note: B-B is defined as back of curb to back of curb.

The allowable flow across streets shall be limited within the criteria shown in Table 1-3.

TABLE 1-3 Allowable Cross Street Flow

Street Classification	Design Storm Runoff	Major Storm Runoff
Residential Street (31 feet B-B*)	6 inches of depth in valley gutter	12 inches of depth in valley gutter
Residential Collector (36 feet B-B*), Industrial, and Arterial Streets (widths greater than 36 feet B-B*)	None	6 inches or less over crown

*Note: B-B is defined as back of curb to back of curb.

In general, collector and arterial street crossings will require installation of a storm drain system or other suitable means to transport the design storm runoff under the street. Residential streets shall have cross valley gutters only at infrequent locations, as specified in accordance with good engineering practices.

Lowering of the standard height of street crown shall not be allowed for the purposes of hydraulic design, unless approved by the City Engineer or Director of Public Works. In no case will reduced crowns be allowed on arterial streets.

Where additional hydraulic capacity is required on a street, the gradient must be increased and/or inlets and storm drains or other storm water conveyance facilities shall be installed to remove the required portion of the flow.

Alleys are not an integral part of the drainage system. In general, alleys shall be designed to convey only the runoff from the rear of adjacent lots and direct it to the street at the end of the block. In no case shall runoff in any street be directed to flow into an alley or an alley be used as a drainage way.

1.4.11 FEMA National Flood Insurance Program

The City of Temple and Bell County are participants in the National Flood Insurance Program (NFIP). The Federal Emergency Management Agency (FEMA) administers the NFIP which enables property owners to purchase flood insurance at a reduced cost. In return for making subsidized flood insurance available for existing structures, the City of Temple and Bell County have agreed to regulate new development in Special Flood Hazard Areas (SFHAs). These SFHAs are areas that have special flood, mudslide and/or flood-related erosion hazards. These regulations have been adopted in the form of a floodplain ordinance.

FEMA publishes a Flood Hazard Boundary Map (FHBM) and Flood Insurance Rate Maps (FIRM) showing communities flood hazard areas and the degree of risk in those areas. An FHBM is based on approximate data and identifies, in general, the Special Flood Hazard Areas within a community. FHBM's are used for floodplain management and insurance purposes. When a detailed Flood Insurance Study has been conducted the FIRM will show base flood elevations, insurance risk zones and flood plain boundaries and may show the floodway delineated.

If a flood map is believed to be incorrect, three procedures have been established to change or correct a flood map. They include: 1) Letter of Map Amendment (LOMA); 2) Letter of Map Revision (LOMR), and 3) Physical map revision. A LOMA results from a technical data or scientific data review submitted by the owner who believes his/her property has been incorrectly included in a designated Special Flood Hazard Area. A LOMR is used to change flood zones, flood delineations, flood elevations, and planimetric features. A LOMR is an amendment to the effective FEMA map and is usually followed by a physical map revision. A physical map revision is an official republication of a map to effect changes to flood insurance zones, floodplain delineations, flood elevations, floodways, and planimetric features.

1.4.12 Erosion and Sediment Control

The need for sediment and erosion control facilities, either permanent or temporary, shall be determined according to the standards for sediment and erosion control in developing areas as stated in the Drainage Criteria and Design Manual.

A Sediment Control Plan is required for all developments showing temporary and permanent controls. Any temporary erosion and sedimentation control facilities shall be constructed prior to any grading or extensive land clearing. These facilities must be maintained until construction and landscaping are completed and the potential for significant erosion has passed.

1.4.13 Storm Water Transfer

Planning and design of storm drainage systems should not result in the transfer of drainage problems from one location to another. Channel modifications which create or increase flooding downstream shall be avoided, both for the benefit of the public and to prevent damage to private

parties. Erosion and downstream sediment deposition, increase of runoff peaks, and debris transportation should be avoided.

The subdivision development process can significantly alter historical or natural drainage paths. When these alterations result in a subdivision outfall system that discharges back into the natural drainageway at or near the historical location, the alterations are generally acceptable.

Master planning must be based upon potential future upstream development as determined by the City Engineer or Director of Public Works.

The policy of the City is to avoid transfer of storm drainage runoff from one basin to another and to maintain historical drainage paths. However, the transfer of drainage from basin to basin is a viable alternative in certain instances and will be reviewed on a case by case basis.

1.4.14 Detention and Retention

Storm water runoff may be stored in detention and retention basins. Such storage reduces the drainage capacity required, thereby reducing the land area and expenditures required downstream. Multipurpose utilization of such storage areas is encouraged. Detention/retention basins shall be analyzed both individually and as a system to assure compatibility with one another and with the City's overall Storm Water Management Master Plan

Storage of storm water runoff close to the points of rainfall occurrence such as the use of parking lots, ball fields, property line swales, parks, road embankments, borrow pits and on-site ponds is desirable and encouraged.

Parking lots, such as at shopping centers, create rapid runoff with high discharge rates. Parking lots should provide for temporary storage of runoff except where such storage is impractical. Wherever reasonably acceptable, parks should be used for short-term detention of storm runoff to create drainage benefits.

1.4.15 Storm Water Runoff Quality

The policy of the City of Temple is to include water quality considerations in the design of storm drainage facilities. It is desirable to remove sediment, debris, and other pollutants from storm water runoff where practical and the City encourages implementation of measures to reduce the pollutant load in storm water runoff. Currently, the City of Temple is not required to obtain a National Pollutant Discharge Elimination System (NPDES) general permit. However, future federal regulations may require the City to obtain a general permit and storm water drainage facilities would be required to be compatible with the City's permit. The City of Temple's policy will be updated as needed to comply with future federal regulatory requirements.

Current Environmental Protection Agency (EPA) regulations require that new developments or construction activity that will disturb an area greater than five (5) acres obtain a general NPDES permit for construction activity. The NPDES program in Texas is administered by the U.S. Environmental Protection Agency, Region VI. Additional information on the NPDES program can be obtained at the address listed below:

U.S. Environmental Protection Agency
Region VI Office
1445 Ross Avenue
Dallas, Texas 75202
(214) 655-7175

1.4.16 Drainage Plan Requirements

A Drainage Plan shall be prepared for all development and submitted to the City Engineer or Director of Public Works in accordance with requirements in the City's Subdivision Ordinance. The purpose of the drainage plan is to identify existing and proposed hydrology and hydraulics of the site and the proposed storm drainage system. The plan shall also propose specific solutions to drainage problems that would occur as a result of development. Detailed analysis of drainage basin hydrology and hydraulics is required. Alternative solutions to drainage problems shall be noted and the capacity of facilities on and off-site shall be evaluated. Specific improvements including open channels, storm drains, grading, erosion and sediment control, inlets, culverts, detention/retention basins and other improvements shall be located and sized to meet the requirements of the design and major drainage systems. The plan must describe the general treatment of drainageways, including safety and maintenance, and outline the protection of public facilities and the protection of private property adjacent to the drainageways. **The Drainage Plan should endeavor to demonstrate that the major storm event will be contained within right-of-way or drainage easements. Minimum permissible building floor elevations shall be specified by the Design Engineer in conjunction with construction plans conforming with Table 1-2. A note referencing the specification of minimum permissible building floor elevations on construction plans shall be placed on the subdivision plat. The Drainage Plan must also demonstrate that provisions have been made for surface overflow routes or emergency relief routes to minimize flood damages for storm events that exceed the design and major storm events.**

1.4.17 Drainage Plan Submittal Standards

Plans and profiles shall be drawn on sheets 11" x 17" or 24" x 36" to a horizontal scale of 1"=20' or 1"=50' and to a vertical scale of 1"=2' or 1"=5' (scales may vary on special projects, such as culverts and channel cross sections).

Good quality reproducibles of the original drawings shall be presented to the City of Temple Public Works Department prior to the receipt of final approval and shall remain the permanent property of the City of Temple.

Plans for the proposed storm drainage system shall include property lines, lot and block numbers, dimensions, right-of-way and easement lines, flood plains, street names, paved surfaces (existing or proposed), location, size and type of inlets, manholes, culverts, pipes, channels and related structures, contract limits, outfall details, miscellaneous riprap construction, contour lines, and title block.

Profiles shall indicate the proposed system (size and material) with elevations, flowlines, gradients, left and right channel bank profiles, station numbers, inlets, manholes, groundline and curbline

elevations, typical sections, riprap construction, filling details, minimum permissible building floor elevations within 100-year floodplains and adjacent to open drainage features, pipe crossings, design flow capacities and velocities, and title block.

1.4.18 Operations and Maintenance

Operation and maintenance of storm water facilities is required to ensure that they will perform as designed. Channel bed and bank erosion, drop structures, pipe inlets, and outlets, pumping facilities and overall condition of the facilities shall be routinely inspected and repaired as necessary to avoid reduced conveyance capacity, displeasing aesthetics and ultimate failure. Sediment and debris shall be periodically removed from channels, storm drains, detention basins and retention basins. Trashracks and inlets shall also be routinely cleared of debris to maintain system capacity.

The developer shall provide for perpetual maintenance of private drainage facilities. Private drainage facilities are those drainage improvements which remain on private property, are designed to serve only private property and are not owned by the City. The City will provide for perpetual maintenance of public drainage facilities after the warranty period.

The City Drainage Policy requires that access be provided to all storm water facilities for maintenance and inspection. Developers shall be responsible for providing system features to facilitate maintenance of drainage systems, including inlets, pipes, culverts, channels, ditches, detention and retention basins.

SECTION 2
STORM WATER RUNOFF

Page

2.1 INTRODUCTION 2-3

2.2 RATIONAL METHOD 2-3
- 2.2.1 Runoff Coefficient, C 2-4
- 2.2.2 Rainfall Intensity, i 2-7
- 2.2.3 Time of Concentration, t_c 2-7
  - Overland Flow 2-8
  - Storm Sewer or Street Gutter Flow 2-9
  - Channel Flow 2-9

2.3 SOIL CONSERVATION SERVICE METHODS 2-11
- 2.3.1 Soil Conservation Service Runoff Curve Number 2-11
- 2.3.2 Time of Concentration 2-12
- 2.3.3 Peak Flow Calculation 2-12
  - Tabular Method 2-14
  - Graphical Method 2-15

2.4 HYDROLOGIC MODELS 2-16

2.5 COMPUTERIZED HYDROLOGIC ANALYSIS PACKAGES 2-16

2.6 HEC-1 MODEL 2-17
- 2.6.1 Stream Network Model Development 2-17
- 2.6.2 Rainfall-Runoff Simulation 2-18
  - Hypothetical Frequency-Storm Derivation 2-18
  - Storm Duration 2-19
  - Time Interval 2-19
  - Precipitation 2-19
  - Areal Adjustment 2-20
- 2.6.3 Interception and Infiltration 2-20
- 2.6.4 Lag Time and Concentration Time 2-21
- 2.6.5 Basin Routing 2-21
- 2.6.6 Assumptions and Limitations of HEC-1 2-22

2.7 BIBLIOGRAPHY 2-23

LIST OF TABLES

Table		Page
2-1	Runoff Coefficients	2-5
2-2	Runoff Coefficients for Surface Types	2-6
2-3	Values of N for Use in the Kerby Formula	2-8
2-4	SCS Runoff Curve Numbers for Urban Areas and Other Agricultural Lands	2-13
2-5	Depth-Duration-Frequency Data for Temple, Texas	2-20

LIST OF FIGURES

Figure		Page
2-1	Intensity Duration Frequency Curves, Duration in Minutes	2-25
2-2	Intensity Duration Frequency Curves, Duration in Hours	2-26
2-3	Average Velocities for Travel Time for Shallow Concentrated Flow	2-27
2-4	Example Drainage Basin and Schematic	2-28
2-5	Adjustment of Point Rainfall for Watershed Area	2-29
2-6	Dimensionless Curvilinear Unit Hydrograph and Equivalent Triangular Hydrograph	2-30
2-7	Time of Concentration and Travel Time Worksheet	2-31
2-8	Drainage Area and SCS Curve Number Worksheet	2-32

2.1 INTRODUCTION

The primary objective of this section is to describe how a hydrologic model can be used to develop peak discharge-frequency estimates for a watershed. The hydrologist can use the material presented herein to help choose the appropriate level and detail of a study, based on the availability of the data, time and funds available, and the accuracy requirements of the study results. Any available data for the basin should be used in the calibration of the hydrologic model and in the development of discharge-frequency curves at gaged locations. By using all the resources available, including data from regional sources such as the United States Geological Survey in conjunction with the analytical techniques described herein, the hydrologist can usually make reasonable determinations of discharge-frequency relations for ungaged basins.

This section presents guidelines and methods for determining storm runoff for watersheds within the City of Temple and its extraterritorial jurisdiction area. It describes the method used for determining storm runoff from watersheds of less than 200 acres. It then briefly describes hydrologic models which can be used on watersheds greater than 200 acres. The recommended models for the major watersheds in Temple are provided.

There are several methods for determining the appropriate storm runoff from a watershed. The Rational Method may be used as the primary tool for the determination of peak storm water runoff rates from areas 200 acres or less and is especially useful for the design of storm sewer systems. In instances where detention is modeled, a hydrograph producing method is required, such as the Soil Conservation Service* Tabular Method, TR-20, or HEC-1. The most extensively used methodology for computing runoff hydrographs is based on the Soil Conservation Service (SCS) Unit Hydrograph procedures. These procedures are used to quantify the effects of urbanization, to determine peak flows for large drainage areas, and to design storm water storage facilities. The SCS Unit Hydrograph Method is used and accepted nationwide.

The presentation of these methods is not intended to preclude the use of other methods. However, the designer shall secure approval from the City Engineer or Director of Public Works before utilizing different methods. A written request to use an alternative method must be submitted to the City Engineer or Director of Public Works prior to its use for a specific case. The request must describe the methods to be employed by the designer and present evidence justifying its use rather than the methods specifically identified in the Drainage Criteria and Design Manual. Upon receipt of the request, the City Engineer or Director of Public Works shall have 21 working days to approve or disapprove the use of the alternative method.

2.2 RATIONAL METHOD

The Rational Method is an empirical runoff formula which has gained wide acceptance because of its simple intuitive treatment of peak storm runoff rates in areas less than 200 acres. This method relates runoff to rainfall intensity, surface area and surface characteristics by the formula:

* Note: Soil Conservation Service is now known as the Natural Resource Conservation Service

$$Q = C\,i\,A \qquad (2\text{-}1)$$

where:

Q	=	peak runoff rate, in cubic feet per second (cfs)
C	=	runoff coefficient
i	=	average rainfall intensity, for a duration equal to the time of concentration, in inches per hour
A	=	drainage area of the tributary to the point under consideration, in acres

The Rational Method is based on the following assumptions:

A. The peak rate of runoff at any point is a direct function of the average uniform rainfall intensity during the time of concentration to that point.

B. The frequency of the peak discharge is the same as the frequency of the average rainfall intensity.

C. The time of concentration is the time required for the runoff to become established and flow from the most hydraulically remote part of the drainage area to the point under design. This assumption applies to the most remote in time, not necessarily in distance.

Although the basic principles of the Rational Method apply to drainage areas greater than 200 acres, practice generally limits its use to some maximum area. For larger areas, storage and subsurface drainage flow cause an attenuation of the runoff hydrograph so that the rates of flow tend to be overestimated by the Rational Method. In addition, the assumption of uniform rainfall distribution and intensity becomes less appropriate as drainage area increases. Because of the trend for overestimation of flows and the additional cost in drainage facilities associated with this overestimation, the application of a more sophisticated runoff computation technique is usually warranted for larger drainage areas.

2.2.1 Runoff Coefficient, C

The runoff coefficient, C, is a variable of the Rational Method which is least susceptible to a precise determination and provides the designer with a degree of latitude to exercise his independent judgment. The following discussion is intended to provide a guide to promote the uniform application of runoff coefficients.

The runoff coefficient, C, accounts for abstractions for losses between rainfall and runoff which may vary with time for a given drainage area. These losses are caused by interception by vegetation, infiltration into permeable soils, retention in surface depressions, and evaporation and transpiration.

Table 2-1 presents C values that shall be used for various types of areas. It is often desirable to develop a composite runoff coefficient based in part on the percentage of different types of surfaces in the drainage area. This procedure can be applied to typical "sample" areas as a guide to the selection of usual values of the coefficient for the entire area. Suggested coefficients with respect to surface types are given in Table 2-2.

TABLE 2-1 Runoff Coefficients

Desciption of Area	Return Period 2-yr	5-yr	10-yr	25-yr	50-yr	100-yr
Park and Open Spaces						
Flat, 0-2%	0.25	0.28	0.30	0.34	0.37	0.41
Average, 2-7%	0.33	0.36	0.38	0.42	0.45	0.49
Steep, Over 7%	0.37	0.40	0.42	0.46	0.49	0.53
Single Family Residential Land Use						
Estates greater than 20,000 sq.ft. lots						
Flat, 0-2%	0.32	0.34	0.36	0.41	0.44	0.48
Average, 2-7%	0.38	0.41	0.44	0.49	0.52	0.56
Steep, Over 7%	0.42	0.45	0.48	0.53	0.56	0.60
10,000 to 20,000 sq.ft. lots						
Flat, 0-2%	0.38	0.41	0.44	0.48	0.51	0.56
Average, 2-7%	0.44	0.47	0.51	0.55	0.58	0.63
Steep, Over 7%	0.47	0.51	0.54	0.58	0.62	0.66
7,500 to 10,000 sq.ft. lots						
Flat, 0-2%	0.44	0.47	0.50	0.55	0.58	0.62
Average, 2-7%	0.49	0.52	0.56	0.60	0.64	0.68
Steep, Over 7%	0.52	0.55	0.58	0.63	0.66	0.71
5,000 to 7,500 sq.ft. lots						
Flat, 0-2%	0.50	0.54	0.56	0.61	0.64	0.69
Average, 2-7%	0.54	0.58	0.61	0.65	0.69	0.74
Steep, Over 7%	0.56	0.60	0.63	0.68	0.71	0.76
Multiple Family Residential Land Use						
Low Density (4 stories or less)	0.54	0.58	0.61	0.65	0.69	0.74
Medium Density (7 stories or less)	0.56	0.60	0.63	0.68	0.71	0.76
High Density (more than 7 stories)	0.59	0.63	0.66	0.71	0.75	0.80
Commerical Land Use						
Limited and General Office Building Sites	0.63	0.67	0.70	0.75	0.79	0.84
Shopping Center Sites	0.67	0.71	0.74	0.79	0.83	0.88
Neighborhood Business Districts	0.67	0.71	0.74	0.79	0.83	0.88
Office Parks	0.67	0.71	0.74	0.79	0.83	0.88
Central Business District Sites	0.74	0.79	0.82	0.87	0.91	0.96
Industrial Land Use						
Limited (service station, restaurant)	0.67	0.71	0.74	0.79	0.83	0.88
General (auto sales, convenience storage)	0.67	0.71	0.74	0.79	0.83	0.88
Heavy (surface parking, warehousing)	0.74	0.79	0.82	0.87	0.91	0.96

TABLE 2-2 Runoff Coefficients for Surface Types

Character of Surface	Return Period 2-yr	5-yr	10-yr	25-yr	50-yr	100-yr
Developed						
Asphaltic	0.73	0.77	0.81	0.86	0.90	0.95
Concrete/Roof	0.75	0.80	0.83	0.88	0.92	0.97
Grass Areas (Lawns, Parks, etc.)						
Poor Condition (grass cover less than 50 percent of the area)						
Flat, 0-2%	0.32	0.34	0.37	0.40	0.44	0.47
Average, 2-7%	0.37	0.40	0.43	0.46	0.49	0.53
Steep, Over 7%	0.40	0.43	0.45	0.49	0.52	0.55
Fair Condition (grass cover on 50 to 75 percent of the area)						
Flat, 0-2%	0.25	0.28	0.30	0.34	0.37	0.41
Average, 2-7%	0.33	0.36	0.38	0.42	0.45	0.49
Steep, Over 7%	0.37	0.40	0.42	0.46	0.49	0.53
Good Condition (grass cover larger than 75 percent of the area)						
Flat, 0-2%	0.21	0.23	0.25	0.29	0.32	0.36
Average, 2-7%	0.29	0.32	0.35	0.39	0.42	0.46
Steep, Over 7%	0.34	0.37	0.40	0.44	0.47	0.51
Undeveloped						
Cultivated Land						
Flat, 0-2%	0.31	0.34	0.36	0.40	0.43	0.47
Average, 2-7%	0.35	0.38	0.41	0.44	0.48	0.51
Steep, Over 7%	0.39	0.42	0.44	0.48	0.51	0.54
Pasture/Range						
Flat, 0-2%	0.25	0.28	0.30	0.34	0.37	0.41
Average, 2-7%	0.33	0.36	0.38	0.42	0.45	0.49
Steep, Over 7%	0.37	0.40	0.42	0.46	0.49	0.53
Forest/Woodlands						
Flat, 0-2%	0.22	0.25	0.28	0.31	0.35	0.39
Average, 2-7%	0.31	0.34	0.36	0.40	0.43	0.47
Steep, Over 7%	0.35	0.39	0.41	0.45	0.48	0.52

Source: Rossmiller, R.L. "The Raional Formula Revisited."
City of Austin Drainage Criteria Manual

The designer shall use the above values as a rule of thumb. Areas not conforming to the above descriptions will be evaluated by calculating a composite runoff coefficient. Areas will be evaluated based upon the ultimate development.

2.2.2 Rainfall Intensity, i

Rainfall intensity, i, is the average rate of rainfall in inches per hour. Intensity is selected on the basis of design frequency of occurrence, a statistical parameter established by design criteria, and rainfall duration. For the Rational Method, the critical rainfall intensity is the rainfall having a duration equal to the time of concentration of the drainage basin.

Rainfall intensity can be determined for the 2-, 5-, 10-, 25-, 50- and 100-year return periods from Figures 2-1 and 2-2 for durations from five minutes to 24 hours. The curves in Figure 2-1 are applicable for design frequencies up to a 100-year storm and for durations expressed in minutes, while Figure 2-2 presents the duration in hours.

2.2.3 Time of Concentration, t_c

One of the basic assumptions underlying the Rational Method is that runoff is a function of the average rainfall rate during the time of concentration. The time of concentration, t_c, is defined as the time it takes for runoff to become established and flow from the most hydraulically remote part of the drainage area to the point of reference. It is usually computed by determining the water travel time through the watershed. Overland flow or shallow concentrated flow, storm drain or road gutter flow, and channel flow are the three phases of direct flow commonly used in computing travel time.

For urban areas, the time of concentration consists of an inlet time or overland flow time (t_i) plus the travel time (t_t) in the storm drain, paved gutter, roadside drainage ditch, or drainage channel. For non-urban areas, the time of concentration consists of an overland flow time (t_i) plus the time of travel (t_t) in a combined form, such as a small swale, channel, or drainageway. The travel portion (t_t) of the time of concentration can be estimated from the hydraulic properties of the storm sewer, gutter, swale, ditch, or drainageway. Inlet time, on the other hand, will vary with surface slope, depression storage, surface cover, antecedent rainfall, and infiltration capacity of the soil, as well as distance of surface flow. The time of concentration can be represented by Equation 2-2 for both urban and non-urban areas.

$$t_c = t_i + t_t \tag{2-2}$$

where:

t_c = time of concentration, in minutes

t_i = initial, inlet, or overland flow time, in minutes

t_t = travel time in the ditch, channel, gutter, or storm sewer, in minutes

Overland Flow

The travel time for overland flow consists of the time it takes water to travel from the uppermost part of the watershed to a defined channel or inlet of the storm sewer system. Overland flow is significant in small drainage areas because a high proportion of travel time is due to overland flow. The velocity of overland flow can vary greatly with the surface cover and tillage. If the slope and land use of the overland flow segment are known, the travel time can be calculated using Equation 2-3.

The Kerby Equation is used to compute t_i for overland flow only. If channelized flow occurs in the sub-basin area, other methods must be used to determine the flow time in the channel.

The addition of these two flow times will provide the inlet time of concentration. The Kerby Equation is as follows:

$$t_i = 0.83\left[\frac{NL}{S^{0.5}}\right]^{0.467} \qquad (2\text{-}3)$$

where:

t_i	=	time of concentration, in minutes
N	=	coefficient of roughness, Table 2-3
L	=	length, in feet, measured from the extremity of the catchment area in a direction parallel to the slope until a defined channel is reached
S	=	slope, in feet per foot, the difference in elevation between the extreme point of the catchment area and the point in question, divided by the distance between the two points

TABLE 2-3 Values of N for Use in the Kerby Formula

N	Type of Surface
0.02	smooth impervious surfaces
0.10	smooth bare packed soil, free of stones
0.20	poor grass, cultivated row crops or moderately bare surfaces
0.40	pasture or average grass cover
0.60	deciduous timberland
0.80	conifer timberland, deciduous timberland with deep forest litter or dense grass cover

The time of concentration calculated for fully developed land use should not be less than 5 minutes to avoid the oversizing of inlets, storm sewers and open channels. Overland flow length should not exceed 500 feet for developed areas or 1,000 feet for undeveloped areas before being intercepted by a defined channel or storm sewer inlet. Beyond these distances, use gutter flow or channel flow

velocities based on Manning's Equation. For preliminary work, the travel time (t_t) can be estimated with the help of Figure 2-3.

Storm Sewer or Street Gutter Flow

Travel time through the storm sewer or street gutter system to the main open channel is the sum of travel times in each individual component of the system between the uppermost inlet and the outlet. In most cases, average velocities can be used without a significant loss of accuracy. During major storm events, the sewer system may be fully taxed and additional channel flow may occur, generally at a significantly lower velocity than the flow in the storm sewers. By using the average conduit size and the average slope (excluding any vertical drops in the system), the average velocity can be estimated using Manning's Formula.

Since the hydraulic radius of a pipe flowing half full is the same as when flowing full, the respective velocities are equal. Travel time may be based on the pipe flowing full or half full. The travel time through the storm sewers is computed by dividing the length of flow by the average velocity.

Channel Flow

The travel time for flow in an open channel can be determined by using Manning's Formula to compute average velocities. Average velocities for channel flow should be computed assuming bankfull conditions.

Example 1 Time of Concentration of an Urbanized Watershed

Given: A model urbanized watershed is shown below. Three types of flow exist from the furthermost point of the watershed to the outlet. The following data describes the watershed.

Reach	Description of Flow	Slope, S (Percent)	Length, L (Feet)
A to B	Overland (park, N = 0.40)	3.0	150
B to C	Shallow concentrated (paved)	0.5	400
C to D	Storm sewer (n = 0.015; diameter = 3 ft)	0.4	2,000
D to E	Open channel, gunite, trapezoidal (b = 5 ft; d = 3 ft; R = 1.78 ft; Z = 1; n = 0.019)	0.3	3,000

Find: Compute time of concentration (t_c) for a 25-year recurrence interval

Solution:

1) Compute the overland flow travel time.
Reach A to B (park). From Equation 2-3 for S = 0.03 ft/ft; L = 150 feet; and N = 0.4; t_i = 12.7 minutes.

2) Reach B to C (paved). From Figure 2-3 for a S = 0.5 percent, L = 400 feet; velocity, V, = 1.4 fps.

$$t_t = \frac{L}{60V} = \frac{400}{60(1.4)}$$

t_t = 4.8 minutes

3) Compute the storm sewer flow travel time.
Reach C to D. Use Manning's Equation to compute full-pipe velocity. R=D/4 for a circular pipe.

$$V = \frac{1.49}{n}\left[\frac{D}{4}\right]^{2/3} S^{1/2}$$

$$V = \frac{1.49}{0.015}\left[\frac{3}{4}\right]^{2/3}(0.004)^{1/2} = 5.2 \text{ fps}$$

$$t_t = \frac{L}{60V} = \frac{2{,}000}{60(5.2)} = 6.4 \text{ minutes}$$

4) Compute the open-channel flow travel time.

Reach D to E. Use Manning's Equation to compute bankfull velocity.

$$V = \frac{1.49}{n} R^{2/3} S^{1/2}$$

$$V = \frac{1.49}{0.019}(1.78)^{2/3}(0.003)^{1/2} = 6.3 \text{ fps}$$

$$t_t = \frac{L}{60V} = \frac{3{,}000}{60(6.3)} = 7.9 \text{ minutes}$$

5) Summary

Reach	Description of Flow	Length (ft)	Velocity (fps)	Travel Time (min)
A to B	Overland	150	0.2	12.7
B to C	Shallow concentrated (paved)	400	1.4	4.8
C to D	Storm sewer	2,000	5.2	6.4
D to E	Open channel	3,000	6.3	7.9
Totals		6,200		31.8

t_c = 32 minutes, for the basin

2.3 SOIL CONSERVATION SERVICE METHODS

The Soil Conservation Service (now known as the Natural Resource Conservation Service) hydrologic methods have been widely used by engineers and hydrologists for analyses of small urban watersheds. These methods resulted from extensive analytical work using a wide range of statistical data concerning storm patterns, rainfall-runoff characteristics and many hydrologic observations in the United States. The Soil Conservation Service utilizes a 24 hour storm duration. It should be noted that when the Soil Conservation Service storms are applied, the Type II distribution should be used for the City of Temple and Bell County area.

The Soil Conservation Service methods can be applied to urban drainage areas of any size. A brief explanation of the runoff curve numbers and the tabular and graphical methods are introduced in this section. For detailed information, the user is referred to the following Soil Conservation Service publications:

NEH-4: "Hydrology," Section 4, National Engineering Handbook
TR-20: Computer Program for Project Formulation, Hydrology
TR-55: Urban Hydrology for Small Watersheds
TP-149: A Method for Estimating Volume and Rate of Runoff in Small Watersheds

2.3.1 Soil Conservation Service Runoff Curve Number

The SCS uses an index called the runoff curve number (CN) to represent the combined hydrologic effect of the soil type, land use, hydrologic condition of the soil cover, and the antecedent soil moisture. The CN indicates the runoff potential of soil which is not frozen. Higher CN's reflect a higher runoff potential.

The SCS soil classification system consists of four soil groups which are characterized as follows:

Group A:	deep sand, deep loess, aggregated silts
Group B:	shallow loess, sandy loam
Group C:	clay loams, shallow sandy loam, soils low in organic content, and soils usually high in clay
Group D:	soils that swell significantly when wet, heavy plastic clays and certain saline soils

County soil surveys made by the SCS districts give a detailed description of the soils in a county. This is generally the best means of identifying the soil group.

The SCS cover classification includes three factors: 1) land use, 2) treatment, and 3) hydrologic condition. The land uses are subdivided by treatment practices (Table 2-4). The hydrologic condition reflects the level of land management which are given as poor, fair and good.

Antecedent soil moisture has a significant effect on runoff potential (CN). The SCS has developed three antecedent moisture conditions which are described below:

Condition I:	soils are dry but not to wilting point
Condition II:	average conditions
Condition III:	heavy rainfall, or light rainfall and low temperatures have occurred within the last 5 days; saturated soils

The antecedent moisture condition (AMC) selected should produce reasonable runoff hydrographs results for a specific design problem. For computation of design flood events, an assumption of AMC-II conditions is recommended.

2.3.2 Time of Concentration

The procedures for estimating the time of concentration are described in Section 2.2.3. In hydrograph analysis, the time of concentration is the time from the end of excess rainfall to the point of inflection on the falling limb of the hydrograph. The time of concentration determines the shape of the runoff hydrograph. Thus, changes in the time of concentration cause changes in the resulting hydrograph.

2.3.3 Peak Flow Calculation

The Soil Conservation Service has developed several methods for computing runoff hydrographs for drainage areas. The Tabular and Graphical methods are considered acceptable for the Temple area. The parameters required to calculate the hydrograph are rainfall distribution, runoff curve numbers, time of concentration, and drainage area.

TABLE 2-4 SCS Runoff Curve Numbers for Urban Areas and Other Agricultural Lands

Cover Description		Curve Numbers for Hydrologic Soil Group[1]			
Cover Type and Hydrologic Condition	**Average Percent Impervious Area[2]**	**A**	**B**	**C**	**D**
Fully developed urban areas (vegetation established)					
Open space (lawns, parks, golf courses, cemeteries, etc.)[3]:					
Poor condition (grass cover < 50%)		68	79	86	89
Fair condition (grass cover 50% to 75%)		49	69	79	84
Good condition (grass cover > 75%)		39	61	74	80
Impervious areas:					
Paved parking lots, roofs, driveways, etc. (excluding right-of-way)		98	98	98	98
Streets and roads:					
Paved; curbs and storm sewers (excluding right-of-way)		98	98	98	98
Paved; open ditches (including right-of-way)		83	89	92	93
Gravel (including right-of-way)		76	85	89	91
Dirt (including right-of-way)		72	82	87	89
Western desert urban areas:					
Natural desert landscaping (pervious areas only)[4]		63	77	85	88
Artificial desert landscaping (impervious weed barrier), desert shrub with 1-to 2-inch sand or gravel mulch and basin borders)		96	96	96	96
Urban districts:					
Commercial and business	85	89	92	94	95
Industrial	72	91	88	91	93
Residential districts by average lot size:					
1/8 acre or less (town houses)	65	77	85	90	92
1/4 acre	38	61	75	83	87
1/3 acre	30	57	72	81	86
1/2 acre	25	54	70	80	85
1 acre	20	51	68	79	84
2 acres	12	46	65	77	82
Developing urban areas					
Newly graded areas (pervious areas only, no vegetation)[5]		77	86	91	94
Pasture, grassland, or range--continuous forage for grazing.[6,8]	Poor	68	79	86	89
	Fair	49	69	79	84
	Good	39	61	74	80
Meadow--continuous grass, protected from grazing and generally mowed for hay.	--	30	58	71	78
Brush--brush-weed-grass mixture with brush the major elements.[7,8]	Poor	48	67	77	
	Fair	35	56	70	
	Good	30	48	65	
Woods--grass combination (orchard or tree farm)[9]	Poor	57	73	82	86
	Fair	43	65	76	82
	Good	32	58	72	79

TABLE 2-4 SCS Runoff Curve Numbers for Urban Areas and Other Agricultural Lands

Cover Description		Curve Numbers for Hydrologic Soil Group[1]			
Cover Type and Hydrologic Condition	**Average Percent Impervious Area[2]**	**A**	**B**	**C**	**D**
Woods[8,10]	Poor	45	66	77	83
	Fair	36	60	73	79
	Good	30	55	70	77
Farmsteads--buildings, lanes, driveways, and surrounding lots.	--	59	74	82	86

1 Average runoff condition, and $I_a = 0.2S$.
2 The average percent impervious area shown was used to develop the composite CN's. Other assumptions are as follows: impervious areas are directly connected to the drainage system, impervious areas have a CN of 98, and pervious areas are considered equivalent to open space in good hydrologic condition. CN's for other combinations of conditions may be computed using Figures 2-3 or 2-4 located in TR-55.
3 CN's shown are equivalent to those of pasture. Composite CN's may be computed for other combinations of open space cover type.
4 Composite CN's for natural desert landscaping should be computed using Figures 2-3 or 2-4 located in TR-55 based on the impervious area percentage (CN = 98) and the pervious area CN. The pervious area CN's are assumed equivalent to desert shrub in poor hydrologic condition.
5 Composite CN's to use for the design of temporary measures during grading and construction should be computed using Figures 2-3 or 2-4, located in TR-55 based on the degrees of development (impervious area percentage) and the CN's for the newly graded pervious area.
6 *Poor:* <50% ground cover or heavily grazed with no mulch.
Fair: 50 to 75% ground cover and not heavily grazed.
Good: >75% ground cover and lightly or only occasionally grazed.
7 *Poor:* <50% ground cover.
Fair: 50 to 75% ground cover.
Good: >75% ground cover.
8 Actual curve number is less than 30; use CN = 30 for runoff computations.
9 CN's shown were computed for areas with 50% woods and 50% grass (pasture) cover. Other combinations of conditions may be computed from the CN's for woods and pastures.
10 *Poor:* Forest litter, small trees, and brush are destroyed by heavy grazing or regular burning.
Fair: Woods are grazed but not burned, and some forest litter covers the soil.
Good: Woods are protected from grazing, and litter and brush adequately cover the soil.

Source: Soil Conservation Service, Urban Hydrology for Small Watersheds, Technical Release No. 55.

Tabular Method

The Tabular Method can be used to develop composite flood hydrographs at any point within a watershed by dividing the watershed into subareas. The method is useful for watersheds where runoff hydrographs are needed from nonhomogeneous areas, i.e., the watershed can be divided into homogeneous sub-areas. It is especially applicable for estimating the effects of land use change in a portion of the watershed. It should be noted that the tables in the TR-55 publication for the tabular method are based on the Soil Conservation Service 24 hour rainfall distributions. The engineer should apply those tables corresponding to a Type II rainfall distribution which is acceptable for the Temple area.

The basic requirement for use of this method is the tabular discharge values for different types of storm distributions. The tabular discharge values in cubic feet of discharge per square mile of watershed per inch of runoff (csm/in) are given in TR-55 for a range of time of concentrations from 0.1 hours to two (2) hours and reach travel times of 0 to three (3) hours. The discharge values were developed from the TR-20 program by computing hydrographs for a

one square mile drainage area at selected times of concentration and routing them through stream reaches with the range of travel times indicated.

The other input needed to develop the composite flood hydrograph includes the total runoff volume (Q_v) and the drainage area (A_m). The equation for calculating the flow at any time is:

$$q = q_t A_m Q_v \tag{2-4}$$

where,

q = hydrograph ordinate at hydrograph time t, cfs

q_t = individual value read from the tabular discharge tables, csm/inch

A_m = drainage area of individual subwatershed, sq.mi.

Q_v = total runoff volume, inches.

The composite flood hydrograph is obtained by summation of the individual subarea hydrographs at each time step. For measuring runoff from a nonhomogeneous watershed, the subdivision of the watershed into relatively homogeneous subareas is required. For additional information regarding the Tabular Method, the SCS publication TR-55 should be consulted.

Graphical Method

As in the Tabular Method, the Graphical Method is based on hydrograph analyses using the TR-20 computer program. The Graphical Method provides a determination of peak discharge only. If a hydrograph is needed or watershed subdivision is required, use the Tabular method or another hydrograph producing method such as HEC-1 or TR-20. TR-55 lists in detail the limitations of the Graphical Method and the engineer should be well aware of these before proceeding. The input requirements for the Graphical Method are as follows:

1. t_c (hours)
2. drainage area (sq.mi.)
3. Type II rainfall distribution
4. 24-hr rainfall (inches)
5. Curve Number

The peak discharge equation for the graphical method is:

$$q_p = q_u A_m Q \tag{2-5}$$

where:

q_p = peak discharge (cfs)

q_u = unit peak discharge (csm/in)

A_m = drainage area (sq.mi.)

Q = runoff (in.)

It should be noted that the original SCS equation also has an F_p factor for pond and swamp conditions. This has been omitted since it is not applicable to the Temple area.

2.4 HYDROLOGIC MODELS

Hydrologic models provide for a more complex approach to computing runoff for areas larger than 200 acres. These models are especially useful if storage is to be evaluated or if complex hydrologic conditions exist within the drainage basin to be studied. In general, hydrologic models allow for the temporal variation of rainfall intensity to be simulated and describe the shape of a hydrograph in a realistic manner (i.e., the initial onset of the storm produces little runoff and as a larger portion of the basin contributes the runoff increases, and finally a peak occurs. The storm reduces in intensity and the runoff diminishes until it has reached its baseflow or a no flow condition.)

Basically, in hydrologic models, the transformation from rainfall excess to streamflow is accomplished through unit hydrograph routing procedures. These procedures allow hydrograph analysis concepts to be applied to watersheds through the development and application of generalized functions for estimating the amount of precipitation lost due to interception and infiltration (loss rates), unit hydrographs, and base flow. The unit hydrograph is usually assumed to give a unique relationship between rainfall excess and surface runoff for a basin regardless of storm size, losses, or other factors. Because of its ease of use, the unit hydrograph has received the most attention by hydrologists.

2.5 COMPUTERIZED HYDROLOGIC ANALYSIS PACKAGES

There are various hydrologic analysis packages available to calculate the runoff from a watershed. HEC-1 is recommended, but if another hydrograph procedure is used approval of the method should be obtained from the City Engineer or Director of Public Works prior to the design or analysis. Several hydrologic programs are summarized below.

A. The Flood Hydrograph Package, HEC-1[17], was developed by the U.S. Army Corps of Engineers Hydrologic Engineering Center (HEC). HEC-1 is a compilation of several methods including various unit hydrograph procedures, loss rate functions, and channel and reservoir routing options. If a hydrograph procedure is required, other models may be used, but a HEC-1 analysis is generally recommended.

B. The Technical Release No. 20, "Computer Program for Project Formulation - Hydrology", TR-20[14] was originally developed by the USDA, Soil Conservation Service (SCS) and has been modified by the SCS and other groups. TR-20 uses the procedures described in the SCS National Engineering Handbook, Section 4, Hydrology (NEH-4),

C. Under the sponsorship of the U.S. Environmental Protection Agency (EPA), a comprehensive mathematical model capable of representing urban storm water runoff and combined sewer overflow phenomena was developed. It is referred to as the Storm Water Management Model (SWMM)[7]. SWMM simulates the runoff of a drainage basin for any prescribed rainfall pattern. A total watershed is segmented into a number of smaller basins or subcatchments that can be readily described by its hydraulic or geometric properties. Manning's equation is used to route the excess uniform rainfall across overland surfaces, and through gutters, pipes and streams. The SWMM model simulates both water quantity and quality aspects which are associated with urban runoff and combined sewer systems.

.

2.6 HEC-1 MODEL

The Flood Hydrograph Package[17], HEC-1, model was developed and is supported by the U.S. Army Corps of Engineers Hydrologic Engineering Center (HEC), Davis, California. The model is designed to simulate the surface runoff response of a drainage basin to a precipitation input. For purposes of this Manual, all references in the HEC-1 manual to a "river basin" have been changed to "drainage basin." The model represents the basin as an interconnected system of hydrologic and hydraulic components. Each component models an aspect of the precipitation-runoff process within a portion of the basin commonly referred to as a subbasin. A component may be a surface runoff entity, a stream channel, or a reservoir. Representation of a component requires a set of parameters which specify the particular characteristics of the component, and mathematical relationships which describe the physical processes. The result of the modeling is the computation of streamflow hydrographs at desired locations in the watershed basin.

The major components of the model are discussed briefly. It is recommended that the user solicit additional information in the Users Manual for HEC-1, Flood Hydrograph Package[17].

2.6.1 Stream Network Model Development

Using topographic maps and other geographic information, a drainage basin is subdivided into an interconnected system of stream network components, (see Figure 2-4). A basin schematic diagram, Figure 2-4, is developed by the following steps:

A. The study area watershed boundary is delineated with the aid of topographic maps. For urban basins, municipal drainage maps may also be necessary to obtain an accurate depiction of the basin's extent.

B. Segmentation of the basin into a number of subbasins determines the number and type of stream network components to be used in the model. Two factors have

impact on the basin segmentation: the study purpose and the hydrometeorological variability throughout the basin. First, the study purpose defines the areas of interest in the basin, and hence, the points where subbasin boundaries should occur. Second, the variability of the hydrometeorological processes and basin characteristics determines the number and location of subbasins. Each subbasin is intended to represent an area of the watershed which, on the average, has the same hydraulic/hydrologic properties. Usually, the assumption of uniform precipitation and infiltration over a subbasin becomes less accurate as the subbasin size increases. If the subbasins are chosen appropriately, the average parameters used in the components will more accurately model the subbasin.

C. Each subbasin is represented by a combination of model components. Subbasin runoff, basin routing, reservoir, diversion and pump components are available.

D. The subbasins and their components are linked together to represent the topology of the drainage basin. HEC-1 has several methods for combining or linking together outflow from the various components.

2.6.2 Rainfall-Runoff Simulation

The HEC-1 model components are used to simulate the rainfall-runoff process as it occurs in an actual drainage basin. The model components are based upon mathematical relationships which are intended to represent individual meteorologic, hydrologic and hydraulic processes which comprise the precipitation-runoff process. These processes consist of precipitation, interception/infiltration, transformation of precipitation excess to subbasin outflow, addition to baseflow and flood hydrograph routing.

Hypothetical Frequency-Storm Derivation

Development of a hypothetical storm is derived from National Weather Service (NWS) rainfall data. The following steps are performed to develop the synthetic storm.

A. Establish the appropriate storm duration and the time interval for subdividing the storm rainfall;

B. Extract the rainfall values from Table 2-5 for the study area;

C. Make adjustments to the rainfall depth for size of drainage area, if needed;

D. Adjust for partial to annual series (if required);

E. Compute incremental rainfall amounts, and;

F. Arrange the storm rainfall increments in time.

Each of these steps is described in the following paragraphs. Steps E and F are optional in HEC-1. The individual may create a rainfall distribution, using a standard SCS curve distribution or another

method of rainfall distribution. The method detailed here allows a "balanced" storm which produces a consistent depth-frequency relation for each duration of the total storm.

Storm Duration

Before constructing any hypothetical event, total duration and time interval for each rainfall increment must be estimated. Both parameters must reflect the type and size of the drainage area and the type and location of basin features one intends to analyze. The total duration of the hypothetical storm is directly related to the time of concentration of the watershed. The duration should be increased considerably if the total volume of runoff as well as peak discharge is of importance in the study. Drainage basins having an unusually large amount of flood plain storage may require a storm of longer-duration to capture the attenuation effect of large natural storage areas. Reservoir studies require long-duration events for full assessment of the reservoir flood storage needed.

Time Interval

The computation time interval must be small enough to accurately define the flood hydrograph (especially the peak); however, too small an interval will result in excess computations by the individual or the computer. The time interval will generally be established by the fastest peaking subarea of the overall basin model for which the peak discharge is required (i.e., for later use in developing water surface profiles, to evaluate the effects of a flood control component, etc.) The time interval must be small enough to define the rising limb and peak for the hydrograph for this subarea.

Precipitation

Precipitation input to HEC-1 is in terms of hyetographs (rainfall-intensity-duration pattern), historical storms or synthetic storms. The hyetograph pattern is assumed to be uniformly distributed over the subbasin. Precipitation for an observed or historical storm event can be supplied to the program by a basin-average precipitation method or weighted precipitation gage method. The synthetic storm is frequently used in planning and design studies and is typically generated from depth-duration data. A synthetic storm of any duration from 5 minutes to 10 days can be generated based on given depth-duration data. A triangular precipitation distribution is constructed such that the depth specified for any duration occurs during the central part of the storm. This is referred to as a "balanced storm."

Precipitation data can be entered on the PH card in HEC-1. Table 2-5 provides the depth-duration frequency data for the City of Temple.

TABLE 2-5 Depth-Duration-Frequency Data for Temple, Texas

Duration (Min)	Rainfall Depth (inches) Frequency 2-Yr	5-Yr	10-Yr	25-Yr	50-Yr	100-Yr
5	0.50	0.58	0.64	0.74	0.81	0.88
10	0.85	0.98	1.09	1.24	1.36	1.48
15	1.09	1.26	1.40	1.60	1.76	1.93
30	1.57	1.89	2.12	2.46	2.73	2.99
60	2.02	2.54	2.88	3.37	3.75	4.13
120	2.34	3.10	3.60	4.26	4.76	5.26
180	2.61	3.45	4.05	4.71	5.31	5.94
360	3.06	4.08	4.86	5.76	6.42	7.20
720	3.60	4.80	5.76	6.72	7.80	8.76
1,440	4.08	5.52	6.72	7.92	8.88	10.08

Areal Adjustment

The rainfall data listed in Table 2-5 are "point rainfall depths"; that is, as measured at a rain gage, i.e., a single point. The hypothetical storm will apply to a specific watershed having a defined drainage area and an areal adjustment may be necessary. An adjustment is often not made unless the study area is more than 5 to 10 square miles. When the drainage area is larger than about 10 square miles, the adjustment becomes significant, particularly for the 30- and 60-minute durations. Figure 2-5 is used to adjust the rainfall for area. The areal adjustment factor is automatically accounted for on the PH card.

2.6.3 Interception and Infiltration

Land surface interception, depression storage and infiltration are referred to in HEC-1 as precipitation losses. Interception and depression storage include the surface storage of water by trees or grass, local depressions in the ground surface, or in areas where water is not free to move as overland flow. Infiltration represents the movement of water to areas beneath the land surface.

Two important factors should be noted about the precipitation loss computation in HEC-1. First, precipitation which does not contribute to the runoff process is considered to be lost from the system. Second, the equations used to compute the losses do not provide for soil moisture or surface storage recovery. This makes the HEC-1 model a single event-oriented model.

The precipitation loss computations can be used with the unit hydrograph model components. In the case of the unit hydrograph component, the precipitation loss is considered to be a subbasin average (uniformly distributed over an entire subbasin).

In HEC-1, the precipitation loss can be calculated by one of four methods. Using any of these methods, an average precipitation loss is determined for a computational interval and subtracted from the rainfall/snowmelt hyetograph. The resulting precipitation excess is used to compute an

outflow hydrograph for a subbasin. The four methods used to calculate precipitation losses are: 1) initial and constant loss rate; 2) exponential loss rate; 3) SCS Runoff Curve Number; and 4) Holtan loss rate. It is recommended to use the SCS Runoff Curve Number method for calculation of interception and infiltration losses.

2.6.4 Lag Time and Concentration Time

Two basic equations are used in defining the shape of the unit hydrograph. The first equation defines the lag time of the basin, L, or the time from the midpoint of unit excess rainfall to the unit hydrograph peak, t_p. A number of relationships are given for the dimensions of the SCS synthetic unit hydrograph (Figure 2-6). The lag time is related to the time of concentration by the equation:

$$L = 0.6\ t_c \qquad (2\text{-}5)$$

where:

L = lag time, in hours

t_c = time of concentration, in hours

2.6.5 Basin Routing

A basin routing, referred to as "river routing" in the HEC-1 is used to represent flood wave movement in a channel. The input to the component is an upstream hydrograph, which may have resulted from an individual or a combined contribution of subbasin runoff, basin routing or diversions. The hydrograph is routed to a downstream point based on the characteristics of the channel. The hydrograph routed through channel reaches and reservoirs is based on the continuity equation and some relationship between discharge and storage. These methods are: 1) Muskingum; 2) Kinematic Wave; 3) Modified Puls; 4) Working R and D; and 5) Level Pool Reservoir Routing.

With reference to Figure 2-4, the runoff from subbasin 10 is calculated and routed to control point 20 via routing reach 1020. Runoff from subbasin 20 is calculated and combined with the outflow hydrograph at control point 20. However, if runoff from subbasin 20 is concentrated near the upstream end of reach 1020, runoff from subbasin 10 and 20 can be combined prior to routing through reach 1020.

A suitable combination of subbasin runoff and basin routing components can be used to represent the topology of a drainage basin. The connectivity of the stream network components is determined by the order in which the data components are arranged. Simulation must always begin at the uppermost subbasin in a branch of the stream network. The simulation proceeds downstream until a confluence is reached. Before simulating below the confluence, all flows above that confluence must be computed and routed to that confluence. The flows are combined at the confluence and the combined flows are routed downstream.

2.6.6 Assumptions and Limitations of HEC-1

A drainage basin is represented as an interconnected group of subbasins. The assumption is made that the hydrologic processes can be represented by model parameters which reflect average conditions within a subbasin. If such averages are inappropriate for a subbasin, it is necessary to consider smaller subbasins within which average parameters apply. Model parameters represent spatial and temporal averages. Thus the time interval to be used should be small enough so that temporal averages are adequate. There are several limitations of the HEC-1 model that users should keep in mind. HEC-1 simulations are limited to a single storm event, due to the fact that provision is not made for soil moisture recovery.

2.7 BIBLIOGRAPHY

1. American Society of Civil Engineers, Design and Construction of Sanitary and Storm Sewers, Manuals and Reports on Engineering Practice, No. 37, New York, New York, 1969.

2. City of Austin, Drainage Manual, June, 1993.

3. Fleming, George, Computer Simulation Techniques in Hydrology. (New York: American Elsevier Publishing Co., Inc., 1975).

4. Frederick, R.H., Myers, V.A., Auciello, E.P., Five-to-60 Minute Precipitation Frequency for the Eastern and Central United States, NOAA Technical Memorandum NWS HYDRO-35, U.S. Department of Agriculture, Maryland, 1977.

5. Gray, Don M., Synthetic Unit Hydrographs for Small Watersheds, Journal of the Hydraulics Division, ASCE, Vol. 87, No. HY 4, 1961.

6. Hollis, G.E., The Effects of Urbanization on Floods of Different Recurrence Interval, Water Resources Research, Volume 11, No. 3, June 1975.

7. Huber, Wayne C., and Dickinson, Robert E., Stormwater Management Model, Version 4 User's Manual, Department of Environmental Engineering Sciences, University of Florida, Gainesville, Florida, U.S. Environmental Protection Agency, Athens, Georgia, August 1988.

8. Kerby, W. S., "Time of Concentration for Overload Flow", Civil Engineering, Vol. 29, p. 174, March, 1959.

9. Linsley, Ray K. Jr., Kohler, M.A., Paulhus, J.L.H., Hydrology for Engineers, Second Edition, McGraw-Hill, Inc., 1975.

10. Poertner, Herbert G., Practices in Detention of Urban Stormwater Runoff, American Public Works Association Special Report No. 42, Chicago, Illinois, 1974.

11. Rossmiller, Ronald L., Some Comments on the Rational Formula, Fourth Southwest Symposium and Workshop on Urban Stormwater Management, Texas A&M University, College Station, Texas, December 16-18, 1985.

12. Schulz, E.F., Problem in Applied Hydrology, Water Resources Publications, Fort Collins, CO, 1974.

13. Soil Conservation Service, National Engineering Handbook, Section 4, Hydrology, 1971.

14. Soil Conservation Service, TR-20 Project Formulation - Hydrology (1982 Version) Technical Release Number 20, Lanham, Maryland, May 1982.

15. Soil Conservation Service, Urban Hydrology for Small Watersheds, Technical Release No. 55, June 1986.

16. Snyder, Franklin F., Synthetic Flood Frequency, Journal of Hydraulics Division, ASCE, Vol. 84, No. HY 5, 1958.

17. U.S. Army Corps of Engineers, Hydrologic Engineering Center, HEC-1 Flood Hydrograph Package, Users Manual, Davis, California, Revised, September 1990.

18. U.S. Army Corps of Engineers, Hydrologic Engineering Center, Hydrologic Analysis of Ungaged Watersheds Using HEC-1, Training Document No. 15, April, 1982.

19. U.S. Army Waterways Experiment Station, Models and Methods Applicable to Corps of Engineers Urban Studies, Miscellaneous Paper 11-74-8, National Technical Information Service, August 1974.

20. Viessman, Warren Jr., Knapp, John W., Lewis, Gary L., Harbaugh, Terence E., Introduction to Hydrology, Second Edition, Harper & Row Publishers, New York, 1977.

21. Wright-McLaughlin Engineers, Urban Storm Drainage Criteria Manual, Denver Regional Council of Governments, Colorado, 1969.

SECTION 3
STREET DRAINAGE

Page

3.1 INTRODUCTION 3-3

3.2 EFFECTS OF STORM WATER ON STREET CAPACITY 3-3
- 3.2.1 Interference Due to Sheet Flow Across Pavement 3-3
  - Hydroplaning 3-3
  - Splash 3-4
- 3.2.2 Interference Due to Gutter Flow 3-4
- 3.2.3 Interference Due to Ponding 3-5
- 3.2.4 Interference Due To Water Flowing Across Traffic Lanes 3-5
- 3.2.5 Effect on Pedestrians 3-5

3.3 DESIGN CRITERIA 3-6
- 3.3.1 Street Capacity for Design Storm 3-6
  - Calculating Capacity 3-6
  - Straight Crowns 3-7
  - Parabolic Crowns 3-10
- 3.3.2 Street Capacity for Major Storm 3-15
  - Calculating Capacity 3-15
- 3.3.3 Ponding 3-15
  - Design Storm 3-15
  - Major Storm 3-15
- 3.3.4 Cross-Street Flow 3-15
  - Depth 3-16
  - Capacity 3-16

3.4 INTERSECTION LAYOUT CRITERIA 3-16
- 3.4.1 Gutter Capacity, Design Storm 3-16
  - Pavement Encroachment 3-16
- 3.4.2 Gutter Capacity, Major Storm 3-17
  - Allowable Depth and Inundated Area 3-17
  - Capacity 3-17
- 3.4.3 Ponding 3-17
  - Design Storm 3-17
  - Major Storm 3-17

3.5 BIBLIOGRAPHY 3-18

LIST OF TABLES

Table		Page
3-1	Manning's Roughness Coefficients for Streets and Gutters	3-8
3-2	Coefficients for Equation 3-4, Streets Without Curb Split	3-11
3-3	Coefficients for Equation 3-5, Streets With Curb Split - Higher Gutter	3-12
3-4	Coefficients for Equation 3-6, Streets With Curb Split - Lower Gutter	3-13

LIST OF FIGURES

Figure		Page
3-1	Gutter and Pavement Flow Patterns	3-19
3-2	Flow in Triangular Gutter Sections	3-20
3-3	Flow in Composite Gutter Sections	3-21
3-4	Intersection Drainage	3-22

3.1 INTRODUCTION

Roadways or streets in the urban areas of Temple serve an important and necessary drainage service even though their primary function is for the movement of traffic. However, good planning of streets can substantially help in reducing the size of, and sometimes eliminate the need for a storm drainage system in newly urbanized areas. Traffic and drainage uses are compatible up to a point, beyond which drainage must be secondary to traffic needs. The design of street drainage facilities shall account for the maximum capacity of downstream facilities in order to minimize the risk of downstream flooding.

3.2 EFFECTS OF STORM WATER ON STREET CAPACITY

The storm runoff which influences the traffic capacity of a street can be classified as follows:

A. Sheet flow across the pavement as falling rain flows to the edge of the pavement.

B. Runoff flowing adjacent to the curb.

C. Storm water ponded at low points.

D. Flow across the traffic lane from external sources, or cross-street flow (as distinguished from water falling on the pavement surface).

E. Splashing of any of the above types of flow on pedestrians.

Each of these types of storm runoff must be controlled within acceptable limits so that the street's main function as a traffic carrier will not be unduly restricted. The effect of each of the above categories of runoff on traffic movement are discussed in the following sections.

3.2.1 Interference Due to Sheet Flow Across Pavement

Rainfall which falls upon the paved surface of a street or road must flow overland as sheet flow until it reaches a channel. Channels can be created either by curbs and gutters or by roadside ditches. The direction of flow on the street may be determined by the vector addition of the street grade and the crown slope, which is equivalent to drawing the perpendicular to a contour line on the road as shown in Figure 3-1. The depth of sheet flow will be essentially zero at the crown of the street and will increase as it proceeds towards the channel. Traffic interference due to sheet flow is essentially of two types: hydroplaning and splash.

Hydroplaning

Hydroplaning is the phenomenon of vehicle tires actually being supported by a film of water which acts as a lubricant between the pavement and the vehicle. It generally occurs at speeds commensurate with arterial streets and its effect can be minimized by achieving a relatively rough pavement which will allow water to escape from beneath the tires by pavement grooving to provide drainage, or by reducing travel speed.

Splash

Traffic interference due to splash results from sheet flow of excessive depth caused by water traveling a long distance or at a very low velocity before reaching a gutter. Increasing the street crown slope will decrease both the time and distance required for water to reach the gutter. The crown slope, however, must be kept within acceptable limits to prevent side-slipping of traffic during frozen surface conditions and to allow the opening of doors when parked adjacent to curbs. An exceedingly wide pavement section contributing flow to one curb will also affect the depth of sheet flow. This may be due to superelevation of a curve, off-setting of the street crown due to warping of curbs at intersections, or several traffic lanes between street crown and the gutter. Consideration should be given to all of these factors to maintain a depth of sheet flow within acceptable limits.

3.2.2 Interference Due to Gutter Flow

Water which enters a street, either sheet flow from the pavement surface or overland flow from adjacent land areas, will flow in the gutter of the street until it reaches an outlet, such as a storm drain or a channel. Figure 3-1 shows the configuration of gutter flow moving down a street when there is a storm drain system. As the flow progresses downhill and additional areas contribute to the runoff, the width of flow will increase and progressively infringe upon the traffic lane. If vehicles are parked adjacent to the curb, the width of spread will have little influence on traffic until it exceeds the width of the vehicle by several feet. However, on streets where parking is not permitted, as with many arterial streets, whenever the flow width exceeds a few feet it will significantly affect traffic. Field observations show that vehicles will crowd adjacent lanes to avoid curb flow.

As the flow width increases, it becomes impossible for vehicles to operate without driving through water, and they again begin to use the inundated lane. At this point the traffic velocities will be significantly reduced as the vehicles begin to drive through the deeper water. Splash from vehicles traveling in the inundated lane obscures the vision of drivers of vehicles moving at a higher rate of speed on the open lane.

Eventually, if width and depth of flow become great enough, the street will become ineffective as a traffic carrier. During these periods, it is imperative that emergency vehicles such as fire trucks, ambulances, and police cars be able to traverse the street by moving along the crown of the roadway.

The street classification is also important when considering the degree of interference to traffic. A residential street, and to a lesser extent a collector or arterial street, could be inundated with little effect upon vehicular travel. The small number of cars involved could move at a low rate of speed through the water even if the depth were four to six inches. However, reducing the speed of arterial traffic affects a greater number of private, commercial, and emergency vehicles.

3.2.3 Interference Due to Ponding

Storm runoff ponded on the street surface because of a change in grade or the crown slope of intersecting streets has a substantial effect on traffic. A major problem with ponding is that it may reach depths greater than the curb and remain on the street for long periods of time. Another problem is that ponding is localized in nature and vehicles may enter a pond moving at a high rate of speed.

The manner in which ponded water affects traffic is essentially the same as for curb flow; the width of spread onto the traffic lane is the critical parameter. Ponded water will often bring traffic on a street to a complete halt. In this case, incorrect design of only one facet of an entire street and storm drainage system will render the remainder of the street system useless during the runoff period.

3.2.4 Interference Due To Water Flowing Across Traffic Lanes

Whenever storm runoff moves across a traffic lane, a serious impediment to traffic flow occurs. The cross flow may be caused by superelevation of a curve or a street intersection exceeding the capacity of the higher gutter on a street with cross fall. The problem associated with this type of flow is the same as for ponding in that it is localized in nature and vehicles may be traveling at high speed when they reach the location. If the velocity of vehicles is naturally slow and use is light, such as on residential streets, cross-street flow does not cause sufficient interference to be objectionable.

The depth and velocity of cross-street flow should always be maintained within such limits that it will not have sufficient force to affect moving traffic. If a vehicle which is hydroplaning enters an area of cross street flow, even a minor force could be sufficient to move it laterally towards the gutter.

At certain intersections the flow may be trapped between converging streets and must either flow over one street or be carried underground. If the vehicles crossing the intersection are required to stop, then very little hazard exists to the traveling public. This is the basis for the assumption that valley gutters are acceptable across a residential street where it intersects another residential or collector street. Another point in favor of the use of valley gutters is the continuation of the grade of the dominant street. If the crown of the residential street is allowed to coincide with the crown of the major street, the outside traffic lanes of the major street will have a "hump" at the intersection.

3.2.5 Effect on Pedestrians

In areas where pedestrians frequently use sidewalks, splash due to vehicles moving through water adjacent to the curb is a serious problem. It must also be kept in mind that under certain circumstances, pedestrians will be required to cross ponded water adjacent to curbs.

Since the majority of pedestrian traffic will cease during the actual rainstorm, less consideration need be given to the problem while the rain is actually falling. Ponded water, however, remaining after the storm has passed, must be negotiated by pedestrians.

Streets should be classified with respect to pedestrian traffic as well as vehicular traffic. As an example, streets which are classified as residential for vehicles and located adjacent to a school are arterials for pedestrian traffic. Allowable width of gutter flow and ponding should reflect this fact.

3.3 DESIGN CRITERIA

Design criteria for the collection and transport of runoff on public streets is based on a reasonable frequency of traffic interference. That is, depending on the street classification, certain traffic lanes can be fully inundated once during the design storm return period. For example, a residential street (31 feet B-B*) is allowed to flood to a curb depth of 6-inches during a 10-year frequency storm. During the 10-year period, lesser storms will occur which will produce less runoff and will not inundate the entire street.

Planning and design for urban storm runoff must be considered from the viewpoint of both the regularly expected storm occurrence, that is, the design storm, and the major storm occurrence. The design storm will have a 10-year or 25-year return period depending on the street classification. The major storm will have a return period of 100 years. The objectives of the major storm runoff planning is to eliminate major damage and loss of life. The design drainage system is necessary to eliminate inconvenience, frequently recurring damage, and high street maintenance costs.

3.3.1 Street Capacity for Design Storm

Determination of street capacity for the design storm shall be based upon pavement encroachment. The pavement encroachment for the design storm shall be limited as set forth in Table 1-1 (Section 1.4.10)

When the maximum encroachment is reached, a separate storm drainage system or additional storm drainage capacity shall be provided and designed on the basis of the design storm. Development of the major drainage system is encouraged so that the design storm runoff is removed from the streets, thus moving the point at which the storm drainage system must begin further downstream.

Calculating Capacity

In general, an arterial street crossing will require installation of a storm drain system or other suitable means to transport the design storm runoff under the arterial street. Residential collector streets shall have cross valley gutters only at infrequent locations, as specified in accordance with good engineering practices.

Lowering of the standard height of street crown shall not be allowed for the purposes of hydraulic design, unless approved by the City Engineer or Director of Public Works. In no case will reduced crowns be allowed on arterial streets.

Where additional hydraulic capacity is required on a street, the gradient must be increased and/or inlets and storm drains or other storm water conveyance facilities shall be installed to remove the required portion of the flow.

* B-B is defined as back of curb to back of curb.

Alleys are not an integral part of the drainage system. In general, alleys, shall be designed to convey only the runoff from the rear of adjacent lots and direct it to the street at the end of the block. In no case shall runoff in any street be directed to flow into an alley or an alley be used as a drainageway.

When the allowable encroachment has been determined, the gutter (that portion of the street used to convey runoff) capacity shall be computed using the appropriate pavement section with the curb forming a vertical leg of the section. These gutter cross sections usually take the form of a triangular (straight crown slope), composite, or parabolic section. The designer should consider the design cross section and construction techniques when determining which section should be used for computing gutter flow capacity. The following sections describe procedures for computing gutter capacity for straight crown (triangular), composite, and parabolic street cross sections.

The flow of storm water in curb gutter sections is classified as open channel flow. Design calculations are based on a modified form of Manning's Equation. A modification to the hydraulic radius term is required because the hydraulic radius is not suitable for describing the street cross sections. In some cases, the width may be 50 times the depth.

Straight Crowns

The modified Manning's Equation is utilized in triangular channels for straight crown sections to better describe the hydraulic radius of a gutter section. The equation in terms of cross slope and depth of flow at the curb is:

$$Q = 0.56 \left[\frac{Z}{n} \right] S^{0.5} \; d^{2.67} \qquad (3\text{-}1)$$

where:

Q	=	discharge, in cubic feet per second, Figure 3-2
Z	=	reciprocal of cross slope, $1/S_x$, in feet per foot
n	=	Manning's roughness coefficient
S	=	longitudinal slope, in feet per foot
d	=	depth of flow at curb or deepest point, in feet

The resistance of the curb face is neglected in the equation since the resistance is negligible when the cross slope is 10 percent or less.

The width of flow or spread in a triangular channel can be calculated by the following equation.

$$T = Zd$$

(3-2)

where:

T	=	width of flow (spread), in feet
Z	=	reciprocal of cross slope, $1/S_x$, in feet per foot
d	=	depth of flow at curb or deepest point, in feet

Figure 3-2 can be used for a direct solution of Equation 3-1, using Manning's "n" value of 0.016. For other values of "n", divide the value of Qn by "n". Manning's "n" values for different street and gutter roughness conditions are presented in Table 3-1. Figure 3-3 provides the solution for a typical composite gutter section with varying cross slopes.

TABLE 3-1 Manning's Roughness Coefficients for Streets and Gutters

Surface Type	"n" Value
Concrete gutter troweled finish	0.012
Asphalt pavement:	
Smooth texture	0.013
Rough texture	0.016
Concrete gutter with asphalt pavement:	
Smooth	0.013
Rough	0.015
Concrete pavement:	
Float finish	0.014
Broom finish	0.016
Brick	0.016

Example 1 - Straight Crown Section - Gutter Carrying Capacity for Design Storm

Given: 6-inch vertical curb
35 ft wide, face to face of curb, residential collector street (36 ft B-B)
Straight crown section without crown offset
6-inch crown height
Street grade = 0.5% = 0.005 ft/ft
Assume n = 0.016

Find: Capacity, each gutter

Solution: 1) Determine allowable pavement encroachment.

From Table 1-1, one standard lane (12 ft) must remain clear.

2) Calculate width of flow, cross slope, and gutter flow depth for allowable encroachment.

T = top width = (35 ft - 12 ft)/2 = 11.5 ft
S_x = cross slope = 0.5 ft / 17.5 ft = 0.0286 ft/ft
d = gutter flow depth = (11.5 ft / 17.5 ft) x 0.5 = 0.328 ft = 3.9 in.

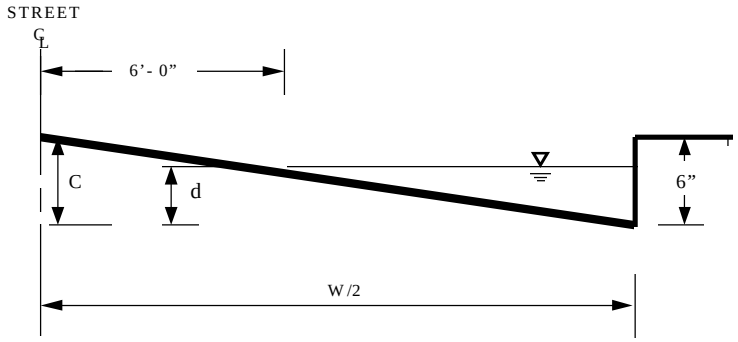

3) Calculate capacity for each gutter.

Using equation 3-1 (also Nomograph in Figure 3-2 may be used)

$$Q = 0.56 \left[\frac{Z}{n}\right] S^{0.5} \; d^{2.67}$$

$Z = 1 / S_x = 1 / 0.00286 = 35$

$Q = 0.56 \text{ x } (35 / 0.016) \text{ x } (0.005)^{0.5} \text{ x } (0.328)^{2.67}$

Q = 4.4 cfs in each gutter

Parabolic Crowns

Parabolic crowns are frequently used in street cross section design as a means of uniformly increasing the cross slope rate toward the gutter. Flat slopes are near the centerline of the roadway where a minimum accumulation of water occurs, and the steep slopes are in the gutter where storm water accumulates. Flows in the gutter of a parabolically crowned street are calculated from a variation of Manning's Equation, as shown in Equation 3-3 below, which assumes steady flow in a prismatic open channel.

$$Q = \frac{1.486}{n} \bullet \left[\frac{4c}{w^2}\int_{x_a}^{x_b} x^2 dx - \left(\frac{4c}{w^2}\left(x_a^{\,2}\right)\right)\left(x_b - x_a\right)\right] \bullet \left[\frac{\frac{4c}{w^2}\int_{x_a}^{x_b} x^2 dx - \left(\frac{4c}{w^2} x_a^{\,2}\right)\left(x_b - x_a\right)}{\int_{x_a}^{x_b}\left(1 + \left(\frac{8\,c}{w^2} x^2\right)^2\right)^{\frac{1}{2}} dx + \frac{4c}{w^2}\left(x_b^{\,2} - x_a^{\,2}\right)}\right]^{\frac{2}{3}} \bullet S^{\frac{1}{2}} \qquad 3\text{-}3$$

where

Q = gutter flow, cfs

c = street crown, feet

w = total street width from face of curb to face of curb, feet

n = Manning's roughness coefficient

S = street or gutter slope, ft/ft.

x_a, x_b = horizontal coordinates, ft.

Equation 3-3 is complicated and difficult to solve. To provide a means of determining flow in the gutter, generalized gutter flow equations for combinations of parabolic crown heights, curb splits,

and street grades of different street widths are provided. These equations have a logarithmic form and may be used to calculate gutter flow for parabolic streets with or without curb split.

Streets Without Curb Split

Curb Split is the vertical difference in elevation between curbs at a given street cross section. The gutter flow equation for parabolic crown streets without any curb split is:

$$\text{Log } Q = K_o + K_1 \text{ Log } S + K_2 \text{ Log } y \qquad (3\text{-}4)$$

where

Q = gutter flow, cfs

S = street or gutter slope, ft/ft

y = water depth in the gutter, feet

K_o, K_1, K_2 = constant coefficients shown in Table 3-2 for different street widths.

Table 3-2 Gutter Flow Coefficients for Streets Without Curb Split, (Eqn. 3-4)

Street Width* (feet)	Coefficients K_o	K_1	K_2
30	2.85	0.50	3.03
35	2.88	0.50	3.00
36	2.89	0.50	2.99
40	2.85	0.50	2.89
44	2.84	0.50	2.78
48	2.83	0.50	2.78
60	2.85	0.50	2.74

*Note: Street width in this table is measured from face of curb to face of curb (F-F). Source: City of Austin Drainage Manual

Streets With Curb Split - Higher Capacity Gutter

The gutter flow equation for calculating gutter flow in the gutter with the larger capacity is as follows:

$$\text{Log } Q = K_o + K_1 \text{ Log } S + K_2 \text{ Log } y + K_3 (CS) \qquad (3\text{-}5)$$

where

Q = gutter flow, cfs

S = street or gutter slope, ft/ft

y = water depth in the gutter, feet

CS = curb split, feet

K_o, K_1, K_2, K_3 = constant coefficients shown in Table 3-3 for different street widths.

Table 3-3 Gutter Flow Coefficients for Streets With Curb Split - Higher Gutter (Eqn. 3-5)

Street Width (feet)	Coefficients K_o	K_1	K_2	K_3	Curb Split Range (feet)
30	2.85	0.50	3.03	-0.131	0.0-0.6
35	2.88	0.50	3.00	-0.139	0.0-0.8
36	2.89	0.50	2.99	-0.140	0.0-0.8
40	2.85	0.50	2.89	-0.084	0.0-0.8
44	2.84	0.50	2.78	-0.091	0.0-0.9
48	2.83	0.50	2.83	-0.095	0.0-1.0
60	2.85	0.50	2.74	-0.043	0.0-1.2

*Note: Street width in this table is measured from face of curb to face of curb (F-F). Source: City of Austin Drainage Manual

Streets With Curb Split - Lower Capacity Gutter

The gutter flow equation for calculating gutter flow in the gutter with the lesser capacity is as follows:

$$\text{Log } Q = K_o + K_1 \text{ Log } S + K_2 \text{ Log } y + K_3 (CS) \qquad (3\text{-}6)$$

where

Q = gutter flow, cfs

S = street or gutter slope, ft/ft

y = water depth in the gutter, feet

CS = curb split, feet

K_o, K_1, K_2, K_3 = constant coefficients shown in Table 3-4 for different street widths.

Table 3-4 Gutter Flow Coefficients for Streets With Curb Split - Lower Gutter (Eqn. 3-6)

Street Width (feet)	Coefficients K_o	K_1	K_2	K_3	Curb Split Range (feet)
30	2.70	0.50	2.74	-0.215	0.0-0.6
35	2.73	0.50	2.73	-0.214	0.0-0.8
36	2.74	0.50	2.73	-0.214	0.0-0.8
40	2.75	0.50	2.73	-0.198	0.0-0.8
44	2.76	0.50	2.73	-0.186	0.0-0.9
48	2.77	0.50	2.72	-0.175	0.0-1.0
60	2.80	0.50	2.71	-0.159	0.0-1.2

*Note: Street width in this table is measured from face of curb to face of curb (F-F). Source: City of Austin Drainage Manual

Parabolic Crown Location

The gutter flow equation presented for parabolic crowns with split curb heights is based on a procedure for locating the street crown. The procedure allows the street crown to shift from the street center line toward the high ¼ point of the street in direct proportion to the amount of curb split. The maximum curb split occurs with the crown at the ¼ point of the street. The maximum allowable curb split for a street with parabolic crowns is 0.02 feet per foot of street width.

Example: Determination of Crown Location

Given: 0.4 feet design split on 30-ft wide street (measured face to face of curb)

Maximum curb split = 0.02 x street width = $s \cdot w$
= 0.02 x 30 feet = 0.6 feet

Maximum movement = ¼ x 30 feet = 7.5 feet

Split movement = (Design split x Width / Maximum Split x 4)
= 0.4 x 30/(0.6 x 4) = 5 feet

Special consideration should be given when working with cross sections which have the pavement crown above the top of curb. When the crown exceeds the height of the curb the maximum depth of water is equal to the height of the curb, not the crown height. It should be noted that a parabolic section where the crown equals the top of curb will carry more water than a section which has the crown one (1) inch above the top of curb.

Example 2 - Parabolic Section - Gutter Carrying Capacity for Design Storm

Given: 6-inch vertical curb
35 ft wide, face to face of curb, residential collector street (36 ft B-B)
Parabolic section without curb split
6-inch crown height
Street grade = 0.5% = 0.005 ft/ft
Assume n = 0.016

Find: Capacity, each gutter

Solution: 1) Determine allowable pavement encroachment.

From Table 1-1, one standard lane (12 ft) must remain clear.

2) Calculate gutter flow depth for allowable encroachment.

Allowable encroachment = (35 ft - 12 ft)/2 = 11.5 ft, x = 12 ft/2 = 6 ft

$$y = 0.5' - \frac{4(0.5')}{(35')^2}(6')^2 = 0.44' = 5.3''$$

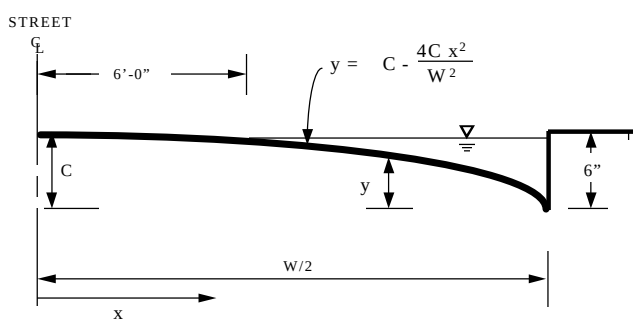

3) Calculate capacity for each gutter, Q

Using equation 3-4,

Log Q = K_o + K_1 Log S + K_2 Log y

from Table 3-2, K_o = 2.88, K_1 = 0.50, K_2 = 3.00

Log Q = 2.88 + 0.50 Log (0.005) + 3.00 Log (0.44)

Log Q = 2.88 - 1.15 - 1.07 = 0.66

Q = $10^{0.66}$ = 4.6 cfs in each gutter

Note: Compare capacity of residential collector with parabolic section (Example 2) with straight crown section (Example 1). The parabolic section has a capacity of 4.6 cfs in each gutter while the straight crown has a capacity of 4.4 cfs.

3.3.2 Street Capacity for Major Storm

Determination of the allowable capacity for the major storm shall be based upon allowable depth and inundated area. The allowable depth and inundated area for the major storm shall be limited as set forth in Table 1-2 (Section 1.4.10).

Calculating Capacity

The street capacity shall be calculated using Manning's Formula with an "n" value applicable to the actual boundary conditions encountered.

3.3.3 Ponding

The term ponding shall refer to areas where runoff is restricted to the street surface by sump inlets, street intersections, low points, intersections with drainage channels, or other reasons.

Design Storm

Limitations for pavement encroachment by ponding for the design storm shall be those presented in Table 1-1 (Section 1.4.10). These limitations shall determine the allowable depth at inlets, gutter turnouts, culvert headwaters, and other hydraulic structures.

Major Storm

Limitations for depth and inundated area for major storms shall be those presented in Table 1-2 (Section 1.4.10). These limitations shall determine the allowable depth at inlets, gutter turnouts, culvert headwaters, and other hydraulic structures.

3.3.4 Cross-Street Flow

Cross-street flow is classified into two general categories. The first type is runoff which has been flowing down the street in a gutter and when the gutter capacity is exceeded the flow crosses the street to the opposite gutter. The second type is from some external source, such as a drainage way which is intersecting the street, which will flow across the crown of a street when the conduit capacity beneath the street is exceeded.

Depth

Cross-street flow depth shall be limited as set forth in Table 1-3 (Section 1.4.10).

Capacity

Based upon the limitations in Table 1-3 and other applicable limitations (such as ponding depth), the quantity of cross-street flow shall be calculated. Where allowable ponding depth would cause cross-street flow, the limitation shall be the minimum allowable of the two criteria.

3.4 INTERSECTION LAYOUT CRITERIA

The following design criteria are applicable at intersections of urban streets. Gutter capacity limitations covered in Section 3.3 shall apply along the street, while this section shall govern at the intersection.

3.4.1 Gutter Capacity, Design Storm

Pavement Encroachment

Limitations at intersections for pavement encroachment shall be as given in Table 1-1.

The capacity of each gutter approaching an intersection shall be calculated based upon the most critical cross section.

A. Continuous Grade Across Intersection

When the gutter flow will be continued across an intersection, the slope used for calculating capacity shall be that of the gutter flow line crossing the street. (Figure 3-4).

B. Flow Direction Change at Intersection

When the gutter flow must undergo a direction change at the intersection greater than 45 degrees, the slope used for calculating capacity shall be the effective gutter slope, defined as the average of the gutter slopes at 0 feet, 25 feet, and 50 feet from the geometric point of intersection of the two gutters. (Figure 3-4).

C. Flow Interception by Inlet

When gutter flow will be intercepted by an inlet on continuous grade at the intersection, gutter slope shall be utilized for calculations. Under this condition, the points for averaging shall be 0 feet, 25 feet, and 50 feet upstream from the inlet. (Figure 3-4).

3.4.2 Gutter Capacity, Major Storm

Allowable Depth and Inundated Area

The allowable depth and inundated area for the major storm shall be limited as described in Table 1-2.

Capacity

The carrying capacity of each gutter approaching an intersection shall be calculated, based upon the most critical cross section.

The grade used for calculating capacity shall be as covered in Gutter Capacity, Design Storm.

3.4.3 Ponding

Design Storm

The allowable pavement encroachment for the design storm shall be as presented in Table 1-1.

Major Storm

The allowable depth and inundated area for the major storm shall be as presented in Table 1-2.

3.5 BIBLIOGRAPHY

1. City of Austin, Drainage Manual, June, 1993.

2. Federal Highway Administration, Drainage of Highway Pavements, Hydraulic Engineering Circular No. 12, March 1984.

3. Izzard, C.F., Hydraulics of Runoff from Developed Surfaces, Proc. Highway Research Board, Vol. 26, 1946.

4. National Research Council, Building Research Advisory Board, A Study of Invert Crown Residential Streets and Alleys, Federal Housing Administration, Washington, D.C., 1957.

5. Oglesby, Clarkson H., Highway Engineering, 3rd ed., John Wiley and Sons, Inc., New York, NY, 1975.

6. Searcy, J.K., Design of Roadside Drainage Channels, U.S. Bureau of Public Roads, Hydraulic Design Series No. 4, U.S. Government Printing Office, Washington, D.C., 1965.

SECTION 4
STORM INLETS

Page

4.1 INTRODUCTION 4-3

4.2 INLET TYPES 4-3

4.3 INLET LOCATION 4-5
- 4.3.1 Spacing of Inlets on Grade 4-5
- 4.3.2 Spacing of Inlets in a Sump 4-7

4.4 CURB-OPENING INLETS 4-9
- 4.4.1 Capacity of Curb-Opening Inlets on Grade 4-10
- 4.4.2 Capacity of Curb-Opening Inlets in a Sump 4-14

4.5 GRATE INLETS 4-17
- 4.5.1 Capacity of Grate Inlets on Grade 4-17
- 4.5.2 Capacity of Grate Inlets in a Sump 4-21

4.6 SLOTTED INLETS 4-23
- 4.6.1 Capacity of Slotted Inlets on Grade 4-23
- 4.6.2 Capacity of Slotted Inlets in a Sump 4-23

4.7 COMBINATION INLETS 4-24
- 4.7.1 Capacity of Combination Inlets on Grade 4-24
- 4.7.2 Capacity of Combination Inlets at Sag Locations 4-26

4.8 BIBLIOGRAPHY 4-27

LIST OF TABLES

Table Page

4-1 Minimum Inlet Capacity Reduction Factors, I_{RF} 4-5
4-2 Distance to Flanking Inlets in Sag Vertical Curve Locations, feet 4-8

LIST OF FIGURES

Figure Page

4-1 Inlet Types 4-29
4-2 Graphical Definition of Symbols 4-30
4-3 Standard Curb Inlet, Temple, Texas 4-31
4-4 Ratio of Frontal Flow to Total Gutter Flow, E_o 4-32
4-5 Curb-Opening and Slotted Drain Inlet Length for Total Interception, L_T 4-33
4-6 Curb-Opening and Slotted Drain Inlet Interception Efficiency, E 4-34
4-7 Depressed Curb-Opening Inlet Capacity in Sump Locations 4-35
4-8 Curb-Opening Inlet Capacity in Sump Locations 4-36
4-9 Curb-Opening Inlet Orifice Capacity for Inclined and Vertical Orifice Throats 4-37
4-10 Curb-Opening Inlets 4-38
4-11 Grate Inlet Frontal Flow Interception Efficiency, R_f 4-39
4-12 Grate Inlet Side Flow Interception Efficiency, R_s 4-40
4-13 Grate Inlet Capacity in Sump Conditions 4-41
4-14 Slotted Drain Inlet Capacity in Sump Locations 4-42

4.1 INTRODUCTION

The purpose of this section is to present the significance of the hydraulic elements of storm inlets and their appurtenances to a storm drainage system. The hydraulic capacity of a gutter inlet depends upon its geometry and upon the characteristics of the gutter flow. The inlet capacity governs both the rate of water removed from the gutter and the amount of water that can enter the storm sewer system. Many costly storm sewers flow at less than design capacity because the storm runoff cannot get into the sewers. Inadequate inlet capacity or poor inlet location may cause flooding on the traveled way and create a safety hazard or interrupt traffic. Limitations of depth of storm water are presented in Section 1.

4.2 INLET TYPES

Gutter inlets can be divided into the following three major classes, each with many variations: (1) curb-opening inlets; (2) grate inlets (including slotted drains), and; (3) combination inlets (Figure 4-1). Two identical units placed end to end are called double inlets.

A brief description of the inlet types follow:

A. Curb-opening inlets. These inlets consist of a vertical opening in the curb through which the gutter flow passes.

B. Grate inlets. These inlets consist of an opening in the gutter covered by one or more grates, and slotted inlets consisting of a pipe along the longitudinal axis with a grate of spacer bars to form slot openings.

C. Combination inlets. These units consist of both a curb-opening and a grate inlet acting as a unit.

The City has an on-going program of inlet cleaning on an annual basis. For design purposes, therefore, inlets will be assumed to be free and clear of any debris and no clogging factor will be used in the design process.

In mathematical form, inlet efficiency, E, is defined by equation 4-1 where:

$$E = \frac{Q_i}{Q} \tag{4-1}$$

Where:

E = efficiency of inlet

Q_i = intercepted flow by inlet, in cubic feet per second

Q = total gutter flow, in cubic feet per second

The discharge that bypasses the inlet, Q_c, is termed carry-over or bypass. The interception capacity of all inlet configurations increase with increasing flow rates; however, inlet efficiency generally decreases with increasing flow rates.

Factors affecting gutter flow also affect inlet interception capacity. The depth of water in the gutter immediately adjacent to the opening is the major factor in the interception capacity of inlets. The interception capacity of a grate inlet depends on the amount of water flowing over the grate, the size and configuration of the grate, and the velocity of flow in the gutter. The efficiency of a grate is dependent on the same factors and total flow in the gutter.

Interception capacity of a curb-opening inlet is largely dependent on flow depth at the curb and curb-opening length. Curb-opening inlet interception capacity and efficiency are increased by the use of a gutter depression at the curb-opening or a depressed gutter to increase the proportion of the total flow adjacent to the curb. The amount of the depression has more effect on the capacity than the arrangement of the depressed area with respect to the inlet.

Slotted inlets function in essentially the same manner as curb-opening inlets, i.e., as weirs with flow entering from the side. Interception capacity is dependent on flow depth and inlet length. Efficiency is dependent on the flow depth, inlet length and total gutter flow.

The interception capacity of a combination inlet consisting of a grate and a curb opening does not differ materially from that of a grate. Interception capacity and efficiency are dependent on the same factors which affect grate capacity and efficiency. A combination inlet, consisting of a curb-opening inlet placed upstream of a grate, has a capacity equal to that of the curb-opening length upstream of the grate plus that of the grate, taking into account the reduced spread and depth of flow over the grate because of the interception by the curb-opening. This inlet configuration has the added advantage of intercepting debris that might otherwise clog the grate and deflect water away from the inlet.

A combination inlet consisting of a slotted inlet upstream of a grate might appear to have advantages when 100 percent interception is necessary. However, grates intercept little more than frontal flow and would usually need to be more than 3 feet wide to contribute significantly to the interception capacity of the combination inlet. A more practical solution would be to use a slotted inlet of sufficient length to intercept total flow.

Most investigators have pointed out that the capacity of an inlet is greatly increased by allowing a small percentage of the flow to bypass the inlet. For a given gutter discharge, the catch of each additional increment of width becomes rapidly less. Thus, the cost of catching the small amount of flow near the thin edge of the triangular flow channel approaches the cost of catching the gutter amount flowing nearer to the curb.

All types of inlets are subject to clogging. Attempts to simulate clogging tendencies in the laboratory have not been successful, except to demonstrate the importance of parallel bar spacing in debris handling efficiency. Grates with wider spacings of longitudinal bars pass debris more efficiently. Problems with clogging are largely local since the amount of debris varies significantly from one neighborhood to another. Some neighborhoods may contend with only a small amount of debris while others experience extensive clogging of drainage inlets. Clogging shall be considered

in the design of storm inlets. The total area of the inlet shall be adjusted to account for clogging based on the following minimum capacity reduction factors.

TABLE 4-1 Minimum Inlet Capacity Reduction Factors, I_{RF}

Inlet	Condition	Minimum Reduction Factor
Curb Opening	Continuous Grade	0.8
	Sump	0.8
Grate	Continuous Grade	0.6
	Sump	0.5
	Transverse Bars	0.5
Slotted	Continuous Grade	0.6
	Sump	0.5
Combination	Continous Grade	1.0
	Sump	0.7

4.3 INLET LOCATION

In general, inlets should be placed at all low points in the gutter grade and at intersections to prevent the gutter flow from crossing traffic lanes of the intersecting road. In urban locations, inlets are normally placed upgrade from pedestrian crossings to intercept the gutter flow before it reaches the crosswalk. Where pavement surfaces are warped, as at cross streets, ramps, or in transitions between superelevated and normal sections, gutter flow should be picked up before the change in the pavement begins in order to lessen water flowing across the roadway.

Where a curbed roadway crosses a bridge, the gutter flow should be intercepted and not be permitted to flow onto the bridge.

4.3.1 Spacing of Inlets on Grade

Inlets should be spaced so as to limit the spread of the water on the pavement to the criterion outlined in Section 1.

With the maximum spread fixed and with a given pavement cross slope and longitudinal slope, the flow in the gutter is also fixed and can be calculated as explained in Section 3. The spacing of inlets is equal to the length of pavement needed to generate the discharge corresponding to the allowable spread on the pavement. The flow bypassing each inlet must be included in the flow arriving at the next inlet.

An example of the computations for inlet spacing for a curb opening inlet follows:

Example 1: Curb-Opening Inlets

Given: An arterial 4-lane section with 2' curb-and-gutter section (n = 0.016) (width = 4(12) + 2(2) = 52'). The pavement cross slope, S_x = 0.02 ft/ft, longitudinal slope, S = 0.005 ft/ft; composite C for pavement and shoulder = 0.75. The contributing area is

105' to each side of the centerline. The design storm is i = 6.0 in/hr. Flow spread must leave at least one lane in each direction free of water, T = 14 ft.

Find: Maximum design inlet spacing for a 10 foot curb-opening, depressed 2 inches from the normal cross slope in a 2 foot wide gutter.

Solution:

1) Q = CiA = 0.75 (6 in/hr) (2)(105) x L/43,560 = 0.0217L

2) Compute the discharge for the composite section from Figure 3-3.

$T = 14$ ft; $W = 2$ ft
$T/W = 14/2 = 7$
$S_w = S_x + a/W = 0.02 + 0.167 = 0.103$
$S_w/S_x = 0.103/0.02 = 5.0$

From Figure 3-3:

Qn = 0.09
Q = 0.09/0.016 = 5.6 cfs at initial inlet

3) Compute the location of the first inlet.

$$L = \frac{Q}{0.0217} = \frac{5.6}{0.0217} = 258\,\text{ft}$$

4) From Figure 4-4, find the ratio of gutter flow to total flow.

$W/T = 2/14 = 0.14$
$E_o = 0.46$

5) $S'_w = S_w - S_x$
$= 0.103 - 0.02 = 0.083$

6) $S_e = S_x + S_wE_o$
$= 0.02 + 0.083(0.46) = 0.058$

7) From Figure 4-5:

$L_T = 18$
$L/L_T = 10/18 = 0.56$

8) From Figure 4-6:

E = 0.78

9) $Q_i = 5.6(0.78) = 4.4$ cfs

Apply minimum inlet capacity reduction factor, I_{RF}, (from Table 4-1)

$I_{RF} = 0.8$

$Q_i = 4.4\ (0.8) = 3.5$ cfs

10) $Q_c = 5.6 - 3.5 = 2.1$ cfs (carry-over to next downstream inlet)

11) Assuming that the drainage area between inlets contributes runoff equal to the interception capacity of the inlet, calculate the spacing of successive inlets.

$Q = 0.0217L$
$L = Q/0.0217$
$L = 3.5/0.0217 = 161$ ft

4.3.2 Spacing of Inlets in a Sump

Three inlets should be placed in a sag vertical curve on all major streets, one at the low point and one on each side of this point, where the grade elevation is approximately 0.2 feet higher than that at the low point. The additional inlets furnish added capacity to allow for flow bypassing the upgrade inlets and provide a safety factor if the sag inlet becomes clogged. These inlets limit the deposition of sediment on the road in the sag and they also reduce flow arriving at the low point and thereby prevent ponding on the road. The inlets should be spaced so as to limit the spread of water on the pavement to the criterion outlined in Section 1.

Sag vertical curves differ one from another in the potential for ponding, and criteria adopted for inlet spacing in sags should be applied only where traffic could be unduly disrupted if an inlet became clogged or runoff from the design storm were exceeded. Therefore, criteria adopted for inlet spacing in sag vertical curves are not applicable to the sag curve between two positive or two negative longitudinal slopes. Also, they should not be applied to locations where ponding depths could not exceed curb height and ponding widths would not be unduly disruptive, as in sag locations on embankment.

Where significant ponding can occur, in locations such as underpasses and in sag vertical curves in depressed sections, it is good engineering practice to place flanking inlets on each side of the inlet at the low point in the sag. The flanking inlets should be placed so that they will limit spread on low gradient approaches to the level point and act in relief of the inlet at the low point if it should become clogged or if the design spread is exceeded.

Table 4-2 shows the spacing required for various depth at curb criteria and vertical curve lengths defined by the following dimensionless coefficient (Equation 4-2):

$$X = (200dK)^{0.5} \qquad (4\text{-}2)$$

where:

x = distance from the low point, feet

d = depth at curb, feet

K = dimensionless Coefficient, Table 4-2

$$K = \frac{L}{A} \tag{4-3}$$

where:

K = dimensionless coefficient, Table 4-2

L = length of vertical curve, in feet

A = algebraic difference in approach grades (G_2 - G_1)

TABLE 4-2 Distance to Flanking Inlets in Sag Vertical Curve Locations, feet

		Depth at Curb (feet)							
Speed (mph)	**"K" L/A**	**0.1**	**0.2**	**0.3**	**0.4**	**0.5**	**0.6**	**0.7**	**0.8**
20	20	20	28	35	40	45	49	53	57
25	30	24	35	42	49	55	60	65	69
30	40	28	40	49	57	63	69	75	80
35	50	32	45	55	63	71	77	84	89
40	70	37	53	65	75	84	92	99	106
45	90	42	60	73	85	95	104	112	120
50	110	47	66	81	94	105	115	124	133
55	130	51	72	88	102	114	125	135	144
60	160	57	80	98	113	126	139	150	160
	*167	58	82	100	116	129	142	153	163
65	180	60	85	104	120	134	147	159	170
70	220	66	94	115	133	148	162	176	188

* Note: Maximum Drainage K = 167

The AASHTO policy on geometrics specifies maximum K values for various design speeds, as shown in Table 4-2.

Example 2: Spacing of Inlet in a Sag

Given: A sag vertical curve at an underpass on a 4-lane divided highway facility. Spread at design Q is not to exceed shoulder width of 10 ft.

$S_x = 0.02$; $K = 130$

Find: Location of flanking inlets if located: (1) in relief of the inlet at the low point when depth at the curb exceeds design depth, and (2) when depth at the curb is 0.1 ft less than depth at design spread.

Solution: Depth at the curb at design spread,
$d = TS_x = 10\ (0.02) = 0.2$ ft

1) From Table 4-2, spacing to flanking inlet = 72 ft

2) From Table 4-2, d - 0.1 ft = 0.2 - 0.1 = 0.1 ft

Spacing to flanking inlets = 51 ft

The purpose in providing Table 4-2 is to facilitate the selection of criteria for the location of flanking inlets based on the ponding potential at the site, the potential for clogging of the inlet at the low point, design spread, design speeds, traffic volumes, and other considerations which may be peculiar to the site under consideration. A depth at curb criterion which does not vary with these considerations neglects consideration of cross slope and design spread and may be unduly conservative at some locations. Location of flanking inlets at a fixed slope rate on the vertical curve also neglects consideration of speed facilities and is not at all conservative for high speed facilities.

Except where inlets become clogged, spread on low gradient approaches to the low point is a more stringent criterion for design that the interception capacity of the sag inlet. AASHTO recommends that a gradient of 0.3 percent be maintained within 50 feet of the level point in order to provide for adequate drainage. It is considered advisable to use spread on the pavement at a gradient comparable to that recommended by the AASHTO Committee on Design to evaluate the location and design of inlets upgrade of sag vertical curves. Standard inlet design and/or location may need adjustment to avoid excessive spread in the sag curve.

4.4 CURB-OPENING INLETS

Curb-opening inlets are effective in the drainage of roadway pavements where flow depth at the curb is sufficient for the inlet to perform efficiently. Curb-openings are relatively free of clogging tendencies and offer little interference to traffic operation.

The curb-opening inlet discussed in this section is illustrated in Figure 4-2. It has a depression beginning "W" feet away from the curb, where "W" is the width of the grate, and dropping 1 inch per foot below the plane of the pavement. Transitions at the two ends extend "W" feet from the end

of the opening. The equations given apply only if the cross section of the street has a uniform slope to the face of the curb.

A standard curb-opening inlet in Temple is a horizontal throat as shown in Figure 4-3.

4.4.1 Capacity of Curb-Opening Inlets on Grade

The ratio of frontal flow to total gutter flow, E_o, for a straight cross slope is expressed by Equation 4-4 or Figure 4-4 for either straight cross slopes or depressed gutter sections.

$$E_o = \frac{Q_w}{Q} = 1 - (1 - W / T)^{2.67} \tag{4-4}$$

where:

E_o = ratio of frontal flow to total gutter flow, Figure 4-4

Q_w = flow in width W, in cubic feet per second

Q = total gutter flow, in cubic feet per second

W = width of depressed gutter or grate, in feet

T = total spread of water in the gutter, in feet

The length of curb-opening inlet required for total interception of gutter flow on a pavement section with a straight cross slope is expressed by Equation 4-5 or Figure 4-5:

$$L_T = 0.6 Q^{0.42} S^{0.3} \left[\frac{1}{nS_x} \right]^{0.6} \tag{4-5}$$

where:

L_T = curb-opening length required for 100% interception, in feet, Figure 4-5

Q = flow in gutter at inlet, in cubic feet per second

S = longitudinal gutter slope, in feet per foot

n = Manning's roughness coefficient for pavement

S_x = cross slope of pavement, in feet per foot

The efficiency of curb-opening inlets shorter than the length required for total interception is expressed by the following equation or Figure 4-6.

$$E = 1 - \left[1 - \frac{L_i}{L_T}\right]^{1.8} \tag{4-6}$$

where:

E = efficiency of inlet or percentage of interception, Figure 4-6

L_i = curb-opening length, in feet

L_T = curb-opening length required for 100% interception, in feet, Figure 4-5

The length of inlet required for total interception by depressed curb-opening inlets or curb-openings in depressed gutter sections can be found by the use of an equivalent cross slope, S_e, in Equation 4-7.

$$S_e - S_x + S'_w E_o \tag{4-7}$$

where:

S_e = equivalent cross slope, in feet per foot

S_x = cross slope of pavement, in feet per foot

S'_w = cross slope of the gutter measured from the cross slope of the pavement, S_x, (a/12W)

a = gutter depression, in inches

W = width of gutter, in feet

E_o = ratio of frontal flow to total gutter flow, Figure 4-4

It is apparent from examination of Figure 4-5 that the length of curb-opening required for total interception can be significantly reduced by increasing the cross slope or the equivalent cross slope. The equivalent cross slope can be increased by use of a continuously depressed gutter section or a locally depressed gutter section.

Using the equivalent cross slope, S_e, Equation 4-5 becomes:

$$L_T = 0.6 Q^{0.42} S^{0.3} \left[\frac{1}{nS_e}\right]^{0.6} \tag{4-8}$$

Equation 4-8 is applicable with either straight cross slopes or compound cross slopes. Figures 4-5 and 4-6 are applicable to depressed curb-opening inlets using S_e rather than S_x.

The interception of a standard length depressed curb-opening inlet is expressed by using Equation 4-1 and solving for Q_i.

The length of inlet required for a specific interception is expressed by rearranging Equation 4-6.

$$L_i = L_T - L_T(1-E)^{0.55} \tag{4-9}$$

where:

L_i = curb-opening length required to intercept a specific % of the flow in the gutter, in feet

L_T = curb-opening length required for 100% interception, in feet, Figure 4-4

E_o = efficiency of inlet or percentage of interception, Figure 4-5

Example 3: Interception of a Curb-Opening Inlet on Grade

Given: Discharge in street of 5 cfs; pavement cross slope, S_x = 0.02 ft/ft; longitudinal slope, S = 0.005 ft/ft, pavement n = 0.016; gutter depression, a = 2 inches = 0.17 ft; and gutter width, W = 2 feet.

Find:
1) Q_i for a 10-ft curb-opening inlet with no gutter depression
2) Q_i for a depressed 10-ft curb-opening inlet

Solution: 1) Q_i for a 10 ft curb-opening inlet with no gutter depression.

a) Find the depth from Figure 3-2 and calculate the spread

y = 0.3 ft
T = Zy = 50 (0.3) = 15 ft

b) Find the curb-opening length for 100% interception from Figure 4-5

L_T = 30 ft

c) Find curb-opening efficiency from Figure 4-6

L/L_T = 10/30 = 0.33
E = 0.52

d) Using Equation 4-1, calculate the flow intercepted

Q_i = EQ

= 0.52(5)
= 2.6 cfs

2) Q_i for a depressed 10 ft curb-opening inlet. Find the spread on the pavement. Use Figure 3-3.

a) Qn = 5(0.016)
= 0.08 cfs

Sw = Sx+a/w
= 0.02 + 0.167/2
= 0.103

Sw/Sx = 0.103/0.02 = 5.2

From Figure 3-3

T/W = 6.8
T = 6.8W
= 6.8(2.0)
= 13.6 ft

b) Find the curb-opening length required for 100% interception
Find E_o, from Figure 4-4.

W/T = 2.0/13.6 = 0.147, use 0.15
S_w/S_x = 5.2
E_o = 0.46

$$S'_w = \frac{a}{12W} = \frac{2}{12(2)} = 0.083$$

S_e = $S_x + S_w E_o$
= 0.02 + 0.083(0.46)
= 0.058

From Figure 4-5:

L_T = 17 ft

c) Find the curb-opening efficiency

$L/L_T = 10/17 = 0.59$

From Figure 4-6:

$E = 0.80$

d) Calculate the flow intercepted by Equation 4-1

$$Q_i = QE$$
$$= 5.0(0.80)$$
$$= 4.0 \text{ cfs}$$

The depressed curb-opening inlet has 35 percent more capacity then the undepressed curb-opening and intercepts 80 percent of the total flow. Application of the minimum inlet capacity reduction factors listed in Table 4-1 would further reduce the design inlet capacity by 20 percent.

4.4.2 Capacity of Curb-Opening Inlets in a Sump

The capacity of a curb-opening inlet in a sump depends on water depth at the curb, the curb-opening length, and the height of the curb-opening. The inlet operates as a weir to depths equal to the curb-opening height and as an orifice at depths greater than 1.4 times the opening height. At depths between 1.0 and 1.4 times the opening height, flow is in a transition stage. The flow in this range can be approximated by solving for the 1.0 and 1.4 values and interpolating.

Spread on the pavement is the usual criterion for judging the adequacy of pavement drainage inlet design. It is also convenient and practical in the laboratory to measure depth at the curb upstream of the inlet at the point of maximum spread on the pavement. Therefore, depth at the curb measurements from experiments coincide with the depth at curb of interest to designers. The weir coefficient for a curb-opening inlet is less than the usual weir coefficient for several reasons, the most obvious of which is that depth measurements from experimental tests were not taken at the weir, and drawdown occurs between the point where measurements were made and the weir.

The weir location for a depressed curb-opening inlet is at the edge of the gutter, and the effective weir length is dependent on the width of the depressed gutter and the length of the curb-opening. The weir location for a curb-opening inlet that is not depressed is at the lip of the curb-opening, and its length is equal to that of the inlet. Limited experiments and extrapolation of the results of tests on depressed inlets indicate that the weir coefficient for curb-opening inlets without depression is approximately equal to that for a depressed curb-opening inlet.

The equation for the interception capacity of a depressed curb-opening inlet operating as a weir is:

$$Q_i = 2.3(L + 1.8W)d^{1.5} \qquad (4\text{-}10)$$

where:

Q_i = intercepted flow by inlet, in cubic feet per second

L = length of curb opening, in feet

W = lateral width of depression, in feet

d = depth at curb measured from the normal cross slope, in feet
= TS_x

The weir equation is applicable to depths at the curb approximately equal to the height of the opening plus the depth of the depression. Thus, the limitation on the use of Equation 4-10 for a depressed curb-opening inlet is:

$$d \leq h + a/12$$

where:

d = depth at curb measured from the normal cross slope, in feet

h = height of curb-opening inlet, in feet

a = depth of depression, in inches

The weir equation for curb-opening inlets without a depression (W = 0) becomes Equation 4-11. The depth limitation for operation as a weir occurs when $d \leq h$. The terms of the equation are the same as identified with Equation 4-10.

$$Q_i = 2.3Ld^{1.5} \tag{4-11}$$

Curb-opening inlets operate as orifices at depths greater than approximately 1.4h. The interception capacity can be computed by the following equation:

$$Q_i = 0.67hL(2gd_o)^{0.5} = 0.67A[2g(d_i - h/2)]^{0.5} \tag{4-12}$$

where:

Q_i = intercepted flow by inlet, in cubic feet per second, Figure 4-7, Figure 4-8 or Figure 4-9

h = height of curb-opening inlet, in feet

d_o = effective head on the center of the orifice throat, in feet

A = clear area of opening, in square feet

d_i = depth at lip of curb-opening, in feet

h = height of curb-opening orifice, in feet

$= \quad TS_x + a/12$

Equation 4-12 is applicable to depressed and undepressed curb-opening inlets and the depth at the inlet includes any gutter depression. Figure 4-7 is a graphical solution for a depressed curb-opening inlet, and Figure 4-8 provides solutions for undepressed curb-opening inlets. Figure 4-9 is used for curb-openings with nonvertical orifice throats.

The height of the orifice in Equation 4-12 assumes a vertical orifice opening. As illustrated in Figure 4-10, other orifice throat locations can change the effective depth on the orifice and the dimension (d_i - h/2). A limited throat width could reduce the capacity of the curb-opening inlet by causing the inlet to go into orifice flow at depths less than the height of the opening.

The orifice equation for curb-opening inlets with a horizontal or inclined throat is:

$$Q = 0.67hL(2gd_o)^{0.5} \tag{4-13}$$

where:

Q = flow in gutter at inlet, in cubic feet per second

h = orifice throat width, in feet

L = length of curb-opening, in feet

g = acceleration of gravity, 32.2 feet per second squared

d_o = effective head on the center of the orifice throat, in feet

Example 4: Curb Opening Inlet in a Sump Location

Given: Curb-opening inlet in a sump location, having a curb-opening length L = 5.0 ft; and an orifice throat h = 5.0 inches.

1) Undepressed curb-opening

S_x = 0.05 ft/ft
T = 8 ft

2) Depressed curb-opening

S_x = 0.05 ft/ft
a = 2.0 in = 0.167 ft
W = 2.0 ft
T = 8.0 ft

Find: Q_i

Solution: 1) a) Calculate the depth of flow at the curb

$$d = TS_x = 8.0\ (0.05) = 0.4 \text{ ft}$$

b) Find the flow intercepted by the curb-opening inlet
d < h, from Figure 4-8.

$$Q_i = 3.8 \text{ cfs}$$

2) a) Depth of flow is the same as (1) above

$$d = 0.4 \text{ ft} < (h + a/12) = 5/12 + 2/12 = 0.58 \text{ ft}$$

b) Find the flow intercepted by the inlet, Figure 4-7

$$P = L + 1.8W = 5.0 + 1.8(2.0) = 8.6 \text{ ft}$$
$$Q_i = 5.0 \text{ cfs}$$

c) Apply the minimum inlet capacity reduction factor, $I_{RF} = 0.8$, from Table 4-1 to the calculated inlet capacity to account for clogging.

$$Q_i = 5.0\ (0.8) = 4.0 \text{ cfs}$$

At d = 0.4 ft, the depressed curb-opening inlet has about 30 percent more capacity than an inlet without depression. In practice, the flow rate would be known and the depth at the curb would be unknown.

4.5 GRATE INLETS

Grate inlets will intercept all of the gutter flow passing over the grate, frontal flow, if the grate is sufficiently long and the gutter flow velocity is low. Only a portion of the frontal flow will be intercepted if the velocity is high or the grate is short and splash-over occurs. A part of the flow along the side of the grate will be intercepted, dependent on the cross slope of the pavement, the length of the grate, and flow velocity.

4.5.1 Capacity of Grate Inlets on Grade

The ratio of frontal flow to total gutter flow, E_o, for a straight cross slope is:

$$E_o = \frac{Q_w}{Q} = 1 - \left(1 - \frac{W}{T}\right)^{2.67} \tag{4-14}$$

where:

E_o = ratio of frontal to total gutter flow, Figure 4-4

Q = total gutter flow, in cubic feet per second

Q_w = flow in width W, in cubic feet per second

W = width of grate, in feet

T = total spread of water in gutter, in feet

The ratio of side flow, Q_s, to total gutter flow is:

$$\frac{Q_2}{Q} = 1 - \frac{Q_w}{Q} = 1 - E_o \tag{4-15}$$

where:

Q_s = ratio of side flow, in cubic feet per second

Q = total gutter flow, in cubic feet per second

Q_w = flow in width W, in cubic feet per second

E_o = ratio of frontal to total gutter flow, Figure 4-4

The ratio of frontal flow intercepted to total frontal flow, R_f, is expressed by Equation 4-16 or Figure 4-11 which takes into account grate length, bar configuration and gutter velocity at which splash-over occurs. This ratio is equivalent to frontal flow interception efficiency.

$$R_f = 1 - 0.09(V - V_o) \tag{4-16}$$

where:

R_f = frontal flow interception efficiency, Figure 4-11

V = velocity of flow in the gutter, in feet per second
= total gutter flow divided by area of flow

V_o = gutter velocity where splash-over first occurs, in feet per second

The use of Figure 4-11 is limited to the seven grates listed on the figure and to grate configurations that are substantially similar to those listed on Figure 4-11.

The ratio of side flow intercepted to total side flow, R_s, or side flow interception efficiency, is expressed by the following equation or Figure 4-12.

$$R_S = 1 / \left[1 + \frac{0.15V^{1.8}}{S_x L^{2.3}} \right] \tag{4-17}$$

where:

R_s = side flow interception efficiency, Figure 4-12

V = velocity of flow in the gutter, in feet per second

S_x = cross slope, in feet per foot

L = length of the grate, in feet

The efficiency, E, of a grate is expressed as:

$$E = R_f E_o + R_s (1 - E_o) \tag{4-18}$$

where:

E = grate efficiency

R_f = frontal flow interception efficiency, Figure 4-11

E_o = ratio of frontal flow to total gutter flow, Figure 4-4

R_s = side flow interception efficiency, Figure 4-12

The first term on the right side of Equation 4-18 is the ratio of intercepted frontal flow to total gutter flow, and the second term is the ratio of intercepted side flow to total side flow. The second term is insignificant with high velocities and short grates.

The interception capacity of a grate inlet on grade is equal to the efficiency of the grate multiplied by the total gutter flow:

$$Q_i = EQ = Q[R_f E_o + R_s (1 - E_o)] \tag{4-19}$$

where:

Q_i = flow intercepted, in cubic feet per second

E = grate efficiency

Q = total gutter flow, in cubic feet per second

R_f = frontal flow interception efficiency, Figure 4-11

E_o = ratio of frontal flow to total gutter flow, Figure 4-4

R_s = side flow interception efficiency, Figure 4-12

Example 5: Interception Capacity of Grate Inlets on Grade

Given: Data from Example 1 in Section 3, Right gutter

6-inch vertical curb
2-foot wide by 0.1-foot deep gutter
2% pavement crown slope
36-foot street width, curb to curb
Street grade = 0.3%
Assume n = 0.016

Find: Interception capacity of:

1) a 2-ft long and 2-foot wide curved vane grate, and
2) a reticuline grate 2-ft long and 2-ft wide

Solution:

W =2 ft
Gutter depression = 0.10 ft
T = 22 ft
S = 0.003
S_x = 0.02

$$S_w = S_x + \frac{9}{W} = 0.02 + \frac{0.1}{2} = 0.07$$

E_o = 0.27 (Figure 4-4)

Q = 11.0 cfs

$$A = \frac{2}{2}(0.5 + 0.4) + 1/2 \text{ x } 0.4 \text{ x } 2.0 = 4.9 \text{ ft}^2$$

$$\frac{W}{T} = \frac{2}{22} = 0.09$$

$$\frac{S_w}{S_x} = \frac{0.07}{0.02} = 3.5$$

V = Q/A = 11.0 cfs / 4.9 ft^2 = 2.2 fps

Find frontal flow and side flow interception efficiency, R_f and R_s, from Figures 4-11 and 4-12.

1) Both grates: R_f = 1.0
Both grates: R_s = 0.137

2) The interception capacity for both grates: From Equation 4-19

$$Q_i = 11.0[(1.0 \text{ x } 0.27) + 0.137(1\text{-}0.27)] = 4.1 \text{ cfs}$$

3) Applying the minimum inlet capacity reduction factor for grate inlets on grade, I_{RF} = 0.6 (Table 4-1)

$$Q_i = 4.1\ (0.6) = 2.5 \text{ cfs}$$

4.5.2 Capacity of Grate Inlets in a Sump

A grate inlet in a sump operates first as a weir having a crest length roughly equal to the outside perimeter (P) along which the flow enters. Bars are disregarded and the side against the curb is not included in computing P. Weir operation continues to a depth (d) of about 0.4 feet above the top of grate and the discharge intercepted by the grate is:

$$Q_i = 3.0\,Pd^{1.5} \tag{4-20}$$

where:

Q_i = rate of discharge into the grate opening, in cubic feet per second

P = perimeter of grate opening, in feet, disregarding bars and neglecting the side against the curb

d = depth of water at grate, in feet

When the depth at the grate exceeds about 1.4 feet, the grate begins to operate as an orifice and the discharge intercepted by the grate is:

$$Q_1 = 0.67A_g\,(2gd)^{0.5} = 5.37A_g d^{0.5} \tag{4-21}$$

where:

Q_i = rate of discharge into the grate opening, in cubic feet per second

A_g = clear opening of the grate, in square feet

g = acceleration of gravity, 32.2 feet per second squared

d = depth of ponded water above top of grate, in feet

Equations 4-20 and 4-21 are solved graphically with Figure 4-13. Between depths of about 0.4 feet and about 1.4 feet (over the grate), the operation of the grate inlet is indefinite due to vortices and other disturbances. The capacity of the grate is somewhere between that given by the above equations. The capacity can be approximated by drawing in a curve between the lines representing the perimeter and net area of the grate to be used.

AASHTO requires that the geometry in a vertical sag be adhered to and checked. AASHTO geometric policy recommends a gradient of 0.3 percent within 50 feet of the level point in a sag vertical curve.

Example 6: Interception Capacity of Grate Inlet in a Sump

Given: Grate inlet, with one side against the curb. Flow from right and left of Q_1 = 2.3 cfs and Q_2 = 2.8 cfs. Cross slope of pavement 0.05 ft/ft. Street cross section is 36 feet wide. d_{max} = 0.5 feet. T_{allow} 0.5/0.05 = 10 feet.

Find: Grate inlet size for design flow and depth at curb. .

Solution: 1) Calculate design discharge, Q_i.

$$Q = 2.3 + 2.8 = 5.1 \text{ cfs}$$

From Table 4-1, minimum inlet capacity reduction factor, IRF = 0.5. Grate inlet must be sized for two times the design discharge to account for clogging potential.

From Figure 4-13, a grate must have a perimeter of 10 feet to intercept 10.2 cfs at a depth of 0.5 ft.

2) Therefore, a 2-ft wide by 6-ft long grate would meet the requirements of a 10-ft perimeter grate.

$$\text{Perimeter} = 2 + 6 + 2 = 10 \text{ feet.}$$

3) AASHTO geometric policy needs to be checked for T at S = 0.003 ft/ft for the design flow. From Figure 3-2, Z/n = 1,250 at Q_1 = 2.3 cfs, d = 0.35 ft, T = 7.0 ft and at Q_2 = 2.8 cfs, d = 0.38 ft, T = 7.6 ft.

A 2 x 6 ft grate is adequate to intercept the design storm at a spread which does not exceed design spread and AASHTO requirements are met. The tendency of grate inlets in a sump to clog may warrant a combination inlet on the low gradient approaches.

4.6 SLOTTED INLETS

Slotted inlets are effective pavement drainage inlets which have a variety of applications. They can be used on curbed or uncurbed sections and offer little interference to traffic operations. Slotted drains should discharge into inlets so that access is provided for periodic cleaning.

4.6.1 Capacity of Slotted Inlets on Grade

Flow interception by slotted inlets and curb-opening inlets are similar in that each is a side weir and the flow is subjected to lateral acceleration due to the cross slope of the pavement. Analysis of data

from tests of slotted inlets with slot widths ³ 1.75-in indicates that the length of slotted inlet required for total interception can be computed by Equation 4-3. Figure 4-5 is therefore applicable for both curb-opening inlets and slotted inlets and Figure 4-6 can be used to obtain the inlet efficiency for the selected length of inlet.

Use of Figures 4-5 and 4-6 for slotted inlets is identical to their use for curb-opening inlets. It is much less expensive to add length to a slotted inlet to increase interception capacity than it is to add length to a curb-opening inlet.

4.6.2 Capacity of Slotted Inlets in a Sump

Slotted inlets in sump locations perform as weirs to depths of about 0.2 ft, dependent on slot width and length. At depths greater than about 0.4 ft, they perform as orifices. Between these depths, flow is in a transition stage. The interception capacity of a slotted inlet operating as an orifice can be computed by Equation 4-22:

$$Q_i = 0.8LW(gd)^{0.5} \tag{4-22}$$

where:

Q_i = intercepted flow by inlet, in cubic feet per second

L = length of slot, in feet

W = width of slot, in feet

g = acceleration of gravity, 32.2 feet per second squared

d = depth of water at slot, in feet ≥0.4 ft

For a slot width of 1.75 in, Equation 4-22 becomes:

$$Q_i = 0.94Ld^{0.5} \tag{4-23}$$

The interception capacity of slotted inlets at depths between 0.2 ft and 0.4 ft can be computed by use of the orifice equation. The orifice coefficient varies with depth, slot width, and the length of the slotted inlet. Figure 4-14 provides solutions for weir flow, Equation 4-23, and a plot representing data at depths between weir and orifice flow.

4.7 COMBINATION INLETS

4.7.1 Capacity of Combination Inlets on Grade

The interception capacity of combination inlets where the curb opening and the grate are placed side-by-side, does not increase interception appreciably greater than a grate alone. Capacity is computed by neglecting the capacity of the curb open is this situation. A combination curb opening is sometimes placed upstream of the grate. The curb opening in such an installation intercepts debris which might otherwise clog the grate. This type of combination inlet where the curb opening

(or slotted drain) is upstream of the grate has an interception capacity equal to the sum of the two inlets, except that the frontal flow and thus the interception capacity of the grate is reduced by interception by the curb opening.

Example 7: Combination Inlets on Grade

Given: Q = 7 cfs, S = 0.05 feet per foot, S_x = 0.03 feet per foot, and n = 0.016.

Find: Determine the interception capacity of a combination curb opening - grate inlet. The curb opening is 10-foot in length and the grate is a 2-foot by 2-foot vane grate placed alongside the downstream 2-foot of the curb opening.

Solution:

1) Length of curb opening for 100% interception, Figure 4-5

   8 feet of the curb opening is located upstream of the grate inlet.

   $L/L_T = 8/52 = 0.15$

2) Interception efficiency, Figure 4-6

   E = 0.25

3) Interception capacity of the curb opening upstream of the grate inlet

   $Q_i = 0.25 \times 7 = 1.8$ cfs

4) Flow to the grate inlet

   $Q - Q_i$ (at the curb opening) = 7.0 - 1.8 = 5.2 cfs

5) Spread of flow at the grate inlet, Figure 3-2

   d = 0.24 feet
   T = 0.24/0.03 = 8.0 feet
   W/T = 2/8 = 0.25

6) Ratio of frontal flow to total flow, Figure 4-4

   $E_o = 0.54$

7) Grate inlet frontal flow interception efficiency, Figure 4-11

   A = ½ x 0.26 x 8.7 = 1.13 sq.ft.
   V = QA = 5.2/1.13 = 4.6 fps
   $R_f = 1.0$

8) Grate inlet side flow interception efficiency, Figure 4-12

$R_s = 0.063$

9) Efficiency of the Grate Inlet, Equation 4-18

$E = R_f E_o + R_s(1-E_o) = 1.0(0.54) = 0.063(0.46) = 0.57$

10) Interception capacity of the grate inlet

$Q_i = 0.57 \times 5.2 = 3.0$ cfs

11) Total interception capacity (curb opening plus grate inlet)

Total $Q_i = 1.8 + 3.0 = 4.8$ cfs

Note: No reduction in inlet capacity is required for combination inlets on grade (Table 4-1, $I_{RF} = 1.0$)

12) Bypass flow

$Q - Q_i = 7.0 - 4.8 = 2.2$ cfs (carry-over to the next downstream inlet)

4.7.2 Capacity of Combination Inlet in Sag Locations

Combination inlets consisting of a grate and a curb opening are considered advisable for use in sags where ponding can be hazardous to traffic. The interception capacity of the combination inlet is essentially equal to that of a grate alone in weir flow. In orifice flow, the capacity is equal to the capacity of the grate plus the capacity of the curb opening.

Figure 4-13 can be used for weir flow in combination inlets in sag locations. Where depth at the curb is such that orifice flow occurs, the interception capacity of the inlet is computed by adding Equations 4-21 and 4-12:

$$Q_1 = 0.67A_g(2gd)^{0.5} + 0.67hL[2g(d_i - h/2)] \qquad (4\text{-}24)$$

where:

Q_i = flow intercepted, in cubic feet per second

A_g = clear area of the grate, in square feet

g = acceleration of gravity, 32.16 feet per second squared

d = depth at the curb, in feet

h = height of curb opening orifice, in feet

L = length of curb opening, in feet

d_i = depth at lip of curb opening, in feet

Trial and error solutions are necessary for depth at the curb for a given flow rate using Figures 4-13, 4-7, and 4-8 for orifice flow.

4.8 BIBLIOGRAPHY

1. Albertson, Maurice L., Barton, James R., and Simons, Daryl B., Fluid Mechanics for Engineers. Prentice-Hall, Inc., Englewood Cliffs, New Jersey, 1960.

2. American Society of Civil Engineers and the Water Pollution Control Federation, Design and Construction of Sanitary and Storm Sewers, A.S.C.E. Manual of Engineering Practice, No. 37 (W.P.C.F. Manual of Practice, No. 9) American Society of Civil Engineers, New York, New York, 1960.

3. Bauer, W.J., and Woo, D.C., Hydraulic Design of Depressed Curb-Opening Inlets, Highway Research Board Record No. 58, Washington, DC, 1964, p. 61-80.

4. Federal Highway Administration, Drainage of Highway Pavements, Hydraulic Engineering Circular No. 12, Washington, DC, March 1984.

5. Izzard, Carl. F., Simplified Method For Design of Curb-Opening Inlets, Report presented at the Annual Meeting of the National Transportation Board, January 1977.

6. Karaki, S.S., and Haynie, R.M., Depressed Curb-Opening Inlets-- Experimental Data, Colorado State University, Civil Engineering Section, Fort Collins, CO, 1961, CER61SSK34.

7. Rossmiller, R. L., "Inlets," Forth Southwest Symposium and Workshop on Urban Stormwater Management, December 16-18, 1985.

SECTION 5
STORM SEWERS

Page

5.1 INTRODUCTION 5-3

5.2 GENERAL CRITERIA 5-4
- **5.2.1 Frequency of Design Runoff 5-4**
- **5.2.2 Velocities and Grades 5-4**
  - **Minimum Grades 5-4**
  - **Maximum Velocities 5-5**
- **5.2.3 Pipe Sizes and Material Types 5-5**
- **5.2.4 Manhole Location 5-6**
- **5.2.5 Pipe Connections 5-6**
- **5.2.6 Alignment 5-7**

5.3 FLOW IN STORM SEWERS 5-7
- **5.3.1 Pipe Flow Charts 5-8**
- **5.3.2 Bernoulli Equation 5-9**

5.4 ENERGY GRADIENT AND PROFILE OF STORM SEWERS 5-12
- **5.4.1 Friction Head Loss 5-13**
- **5.4.2 Minor Head Losses at Structures 5-14**
  - **Obstructions 5-15**
  - **Expansions and Contractions 5-16**

5.5 DESIGN PROCEDURE FOR STORM SEWER SYSTEMS 5-17
- **5.5.1 Preliminary Design Considerations 5-17**
- **5.5.2 Storm Sewer System 5-18**
  - **Determining Type of Flow 5-18**
  - **Storm Sewer Pipe 5-19**
  - **Junctions, Inlets and Manholes 5-19**
  - **Major Storm System 5-20**
- **5.5.3 Inlet System 5-20**
- **5.5.4 Inlet Lateral Pipe Design 5-21**
  - **Outlet Control 5-21**
  - **Inlet Control 5-23**
- **5.5.5 Storm Sewer System Design by the Rational Method 5-24**

5.6 BIBLIOGRAPHY 5-27

LIST OF TABLES

Table **Page**

5-1 Storm Sewer Design Storm Frequency 5-4
5-2 Minimum Slope Required for Scouring Velocity 5-5
5-3 Maximum Velocity in Storm Sewers 5-5
5-4 Roughness Coefficients for Storm Sewers 5-6
5-5 Junction or Structure Minor Loss Coefficient, k_m 5-15
5-6 Head Loss Coefficients Due to Obstructions 5-16
5-7 Head Loss Coefficients for Expansions and Contractions 5-17

LIST OF FIGURES

Figure **Page**

5-1 Uniform Flow for Circular Conduits Concrete n = 0.012 5-29
5-2 Critical Depth for Circular Conduits 5-30
5-3 Velocity for Circular Conduits 5-31
5-4 Discharge Capacity for Concrete Pipe Flowing Full n = 0.012
Pipe Diameters 12" to 54" 5-32
5-5 Discharge Capacity for Concrete Pipe Flowing Full n = 0.012
Pipe Diameters 12" to 132" 5-33
5-6 Energy in Open-Channel Flow and Closed Conduit Flow 5-34
5-7 Minor Head Losses Due to Turbulence at Structures 5-35
5-8 Minor Head Losses Due to Turbulence at Structures 5-36
5-9 Inlet Lateral Definition Sketch Flow Condition 5-37
5-10 Inlet Lateral Pipe Design Outlet Control 12" Diameter Pipe 5-38
5-11 Inlet Lateral Pipe Design Outlet Control 15" Diameter Pipe 5-39
5-12 Inlet Lateral Pipe Design Outlet Control 18" Diameter Pipe 5-40
5-13 Inlet Lateral Pipe Design Outlet Control 21" Diameter Pipe 5-41
5-14 Inlet Lateral Pipe Design Outlet Control 24" Diameter Pipe 5-42
5-15 Inlet Lateral Pipe Design Outlet Control 27" Diameter Pipe 5-43
5-16 Inlet Lateral Pipe Design Outlet Control 30" Diameter Pipe 5-44
5-17 Inlet Lateral Pipe Design Outlet Control 33" Diameter Pipe 5-45
5-18 Inlet Lateral Pipe Design Outlet Control 36" Diameter Pipe 5-46
5-19 Lateral Pipe Design Inlet Control 12" - 36" Diameter Pipes 5-47
5-20 Hydrologic and Hydraulic Computations for Storm Sewers Rational Method 5-49

5.1 INTRODUCTION

It is the purpose of this section to consider the significance of the hydraulic elements of storm sewers and their appurtenances to a storm drainage system. Hydraulically, storm drainage systems are conduits (open or enclosed) in which unsteady and non-uniform free flow exists. Storm sewers accordingly are designed for open-channel flow to satisfy as well as make possible, the requirements for unsteady and non-uniform flow. Steady flow conditions may or may not be uniform.

All storm sewer systems shall be designed by the application of the Manning's Equation when flowing in open channel conditions. The hydraulic grade line shall be checked on storm sewer designs to determine if the open channel flow assumption is valid. In the preparation of hydraulic designs, a thorough investigation shall be made of all existing structures and their performance on the waterway in question.

The design of a storm drainage system should be governed by the following seven conditions:

A. **The system must accommodate the surface runoff resulting from the design storm without serious damage to physical facilities or substantial interruption of normal traffic.**

B. **Runoff resulting from major storms must be anticipated and discharged with minimum damage to physical facilities and minimum interruption of normal traffic.**

C. **The storm drainage system must have a maximum reliability of operation.**

D. **The construction costs of the system must be reasonable with relationship to the importance of the facilities it protects.**

E. **The storm drainage system must require minimum maintenance and must be accessible for maintenance operations.**

F. **The storm drainage system must be adaptable to future expansion with minimum additional cost by the consideration of ultimate development on upstream or existing reaches.**

G. **Site design, swales and natural flow features should be utilized to reduce the need for extensive storm sewer systems whenever possible.**

5.2 GENERAL CRITERIA

5.2.1 Frequency of Design Runoff

The frequency of design runoff is a function of operational and economic criteria with a special emphasis on public safety. As discussed in other sections of this Manual, some types of facilities do not require high levels of protection and periodic flooding is not objectionable. However, for all facilities, the designer must consider the impact of a 100-year flood and provide for its passage without the loss of life or major property damage.

Table 5-1 indicates the minimum acceptable frequencies of design runoff for storm sewers.

TABLE 5-1 Storm Sewer Design Storm Frequency

Streets and Gutters	**Design Storm***
Inlets	**Design Storm***
Storm Sewers	**Design Storm***
Major Drainage System	**Major Storm***

*** Refer to Section 1.4.3 for description of Design and Major Storm**

5.2.2 Velocities and Grades

Minimum Grades

Storm sewers should operate with flow velocities sufficient to prevent excessive deposition of solid material, resulting in objectionable clogging. The controlling velocity occurs near the bottom of the conduit and is considerably less than the mean velocity. Storm sewers shall be designed to have a minimum mean velocity flowing full of 2.0 fps, the lower limit of scouring velocity. Table 5-2 indicates the grades for concrete pipe (n = 0.012) to produce a velocity of 2.0 fps. Any variance must be approved by the City Engineer or Director of Public Works. Outlets on pipes of minimum grade should be designed to avoid sedimentation at the outfall.

TABLE 5-2 Minimum Slope Required for Scouring Velocity*

Pipe Size (inches)	Concrete Pipe Slope (ft/ft)
12	**0.0016**
15	**0.0012**
18	**0.0010**
21	**0.0008**
24	**0.0007**
27	**0.0006**
30	**0.0005**
36	**0.0004**
42	**0.0003**
48	**0.0003**
54	**0.0002**
60	**0.0002**
66	**0.0002**
72	**0.0002**
78	**0.0001**
84	**0.0001**
96	**0.0001**

* **Assume pipe flowing full**

Maximum Velocities

Maximum velocities in conduits are important mainly because of the possibilities of excessive erosion on the storm sewer inverts. Table 5-3 shows the limits of maximum velocity.

TABLE 5-3 Maximum Velocity in Storm Sewers

Description	Maximum Permissible Velocity
Culverts (all types)	**15 fps**
Storm Sewers (collectors)	**15 fps**
Storm Sewers (mains)	**12 fps**

5.2.3 Pipe Sizes and Material Types

Pipes which are to become an integral part of the public storm sewer system shall have a minimum diameter of 18 inches for gravity flow. If alternate shapes are required for utility clearance or special conditions, the designer must contact the City Engineer or Director of Public Works for approval. All reinforced concrete storm sewers shall meet, at a minimum, the requirement of AASHTO M170 Classes III-V. All pipe design and installation must meet the manufacturer's recommendation for minimum depth of cover.

A key consideration in selection of pipe material type involves the design life of the pipe. Pipe design life shall be a minimum 50 years as certified by the manufacturer. All manufacturer requirements for which the design life is based must be met by the engineer. For example, bedding requirements are critical to meeting the pipe design life.

In selecting a roughness coefficient, consideration shall be given to the average conditions during the useful life of the structure. An increased "n" value shall be used primarily in analyzing old conduits where alignment is poor and joints have become rough. If, for example, concrete pipe is being designed at a location and there is reason to believe that the roughness would increase through erosion or corrosion of the interior surface, slight displacement of joints, or entrance of foreign materials, a roughness coefficient should be selected which, in the judgment of the designer, will represent the average condition. Any selection of "n" values below the minimum or above the maximum, either for monolithic concrete structures or concrete pipe must have the written approval of the City Engineer or Director of Public Works.

The coefficients of roughness listed in Table 5-4 are for use in the nomographs contained herein, or for direct solution of Manning's Equation.

TABLE 5-4 Roughness Coefficients for Storm Sewers

Materials of Construction	Design Coefficient[1]
Concrete Pipe	**0.012**

[1] **Designer may select a single representative "n"**

5.2.4 Manhole Location

Manholes shall be located at intervals not to exceed 800 feet for pipe 30 inches in diameter or smaller. Manholes shall be located at conduit junctions, changes in alignment, and ends of curved sections as necessary for maintenance equipment operation.

Manholes for pipe larger than 30 inches in diameter shall be located at points where design indicates entrance into the conduit is desirable; however, in no case shall the distance between openings or entrances be greater than 1,000 feet.

5.2.5 Pipe Connections

Prefabricated wye and tee connections are recommended up to and including 24 inch x 24 inch. Connections larger than 24 inches will be made by field connections. This recommendation is based primarily on the fact that field connections are more easily fitted to a given alignment than are precast connections. Regardless of the amount of care exercised by the Contractor in laying the pipe, gain in footage invariably throws precast connections slightly out of alignment. This error increases in magnitude as the size of pipe increases.

5.2.6 Alignment

In general, storm sewer alignment between manholes shall be straight. Long radius curves may be allowed to conform to street alignment. Short radius curves may be used on larger pipes in order to reduce head losses at junctions. Curves may be produced by angling the joints or by fabricating beveled ends. Angled joints shall be kept at a minimum to maintain a tight joint. Pipe deflection shall not exceed manufacturers recommendations, unless precast or cast-in-place bends are specifically designed for deflection.

5.3 FLOW IN STORM SEWERS

All storm sewers shall be designed by the application of the Continuity Equation and Manning's Equation, either through the appropriate charts and nomographs or by direct solutions of the equations as follows:

$$Q = AV \qquad \textbf{(5-1)}$$

$$Q = \frac{1.49}{n} A R^{1/2} S_f^{1/2} \qquad \textbf{(5-2)}$$

where:

Q	**=**	**pipe flow, in cubic feet per second**
A	**=**	**cross-sectional area of pipe, in square feet**
V	**=**	**velocity of flow, in feet per second**
n	**=**	**Manning's coefficient of roughness of pipe**
R	**=**	**hydraulic radius = A/WP, in feet**
WP	**=**	**wetted perimeter, in feet**
S_f	**=**	**friction slope of pipe, in feet per foot**

There are several general rules to be observed when designing storm sewer sections. When followed, they will tend to alleviate or eliminate the common mistakes made in storm sewer design. These rules are as follows:

A. **Select pipe size and slope so that the velocity of flow will increase progressively, or at least will not appreciably decrease, at inlets, bends, or other changes in geometry or configuration.**

B. **Do not discharge the contents of a larger pipe into a smaller one, even though the capacity of the smaller pipe may be greater due to steeper slope.**

C. **At changes in pipe size from a smaller to a larger pipe, match the soffits (inside top surface) of the two pipes at the same level rather than matching the flow lines. (When necessary for minimal fall, match the 0.8 diameter point of each pipe.)**

D. **Conduits are to be checked at the time of their design with reference to critical slope. If the slope of the line is greater than critical slope, the unit will likely be operating under entrance control instead of the originally assumed normal flow. Conduit slope should be kept below critical slope if at all possible. This also removes the possibility of a hydraulic jump within the line.**

5.3.1 Pipe Flow Charts

Figures 5-1 through 5-3 are nomographs for determining uniform flow, critical depth, and velocity in circular conduits. Figures 5-4 and 5-5 are based on Manning's Equation for full flow and used to determine the discharge capacity for concrete pipe. The nomographs are based upon a value of "n" of 0.012 for concrete.

For values of "n" other than 0.012, the value of Q should be modified by using the formula below:

$$Q_c = \frac{Q_n (0.012)}{n_c} \qquad \textbf{(5-3)}$$

where:

Q_c	=	**flow based upon n_c, in cubic feet per second**
Q_n	=	**flow from nomograph based on n = 0.012, in cfs**
n_c	=	**value of "n" other than 0.012**

This formula is used in two ways. If n_c = 0.015 and Q_c is unknown, use the known properties to find Q_n from the nomograph, and then use the formula to convert Q_n to the required Q_c. If Q_c is one of known properties, you must use the formula to convert Q_c (based on n_c) to Q_n (based on n = 0.012) first, and then use Q_n and the other known properties to find the unknown value on the nomograph.

Example 1 Calculate Design Discharge

Given: **Slope = 0.005 ft/ft; depth of flow, d = 1.8 ft; diameter, D = 36"; n = 0.018**

Find: **Discharge, Q_c**

Solution:

1) **First determine d/D = 1.8 ft/3.0 ft = 0.6 ft**

2) **Enter Figure 5-1 to read Q_n = 34.0 cfs**

3) **Using Equation 5-3; Q_c = 34 (0.012/0.018) = 22.7 cfs**

Example 2 Calculate Velocity of Flow

Given: **Slope = 0.005 ft/ft; diameter D = 36"; Q_c = 22.7 cfs; n = 0.018**

Find: **Velocity of flow, V**

Solution:

1) **First convert Q_c to Q_n, so that the nomograph can be used.**
Using Equation 5-3, Q_n = 22.7 (0.018/0.012) = 34.0 cfs

2) **Enter Figure 5-1 to read d/D = 0.6 ft**

3) **Now enter Figure 5-3 to determine V = 7.5 fps**

5.3.2 Bernoulli Equation

The law of conservation of energy as expressed by the Bernoulli Equation is the basic principle most often used in hydraulics. Energy cannot be lost, thus in a hydraulic system the sum of all energies is a constant. The total energy in mathematical form is Equation 5-4.

$$E = y + \frac{V^2}{2g} + \frac{P}{\gamma} = \text{constant} \qquad \textbf{(5-4)}$$

where:

E	**=**	**total energy head, in feet**
y	**=**	**depth of water, in feet**
V	**=**	**mean velocity, in feet per second**

P	**=**	**pressure at given location, in pounds per square feet**
g	**=**	**acceleration of gravity, 32.2 feet per second squared**
g	**=**	**specific weight of fluid, in pounds per cubic foot**

The theorem states that the energy head at any cross-section must equal that in any other downstream section plus the intervening losses. In open channels, the flow is primarily controlled by the gravitational action of the moving fluid, which overcomes the hydraulic energy losses. The Bernoulli Equation defines the hydraulic principles in open channel flow.

$$H = y + \frac{V^2}{2g} + Z + h_f \qquad \textbf{(5-5)}$$

where:

H	**=**	**total energy head, in feet**
y	**=**	**depth of water, in feet**
V	**=**	**mean velocity, in feet per second**
Z	**=**	**height above datum, in feet**
$\mathbf{h_f}$	**=**	**head loss, in feet**
g	**=**	**acceleration of gravity, 32.2 feet per second squared**

The total energy at point one (1) is equal to the total energy at point two (2). The terms are defined as above.

$$y_1 = Z_1 + \frac{V_1^2}{2g} = y_2 + Z_2 + \frac{V_2^2}{2g} + h_f \qquad \textbf{(5-6)}$$

The Bernoulli Equation is rewritten for pressure or closed conduit flow. The terms are defined as above.

$$\frac{V_1^2}{2g} + \frac{P_1}{g} + Z_1 = \frac{V_2^2}{2g} + \frac{P_2}{g} + Z_2 + h_f \qquad \textbf{(5-7)}$$

Figure 5-6 is a graphical representation of the energy in open channel flow and closed conduit flow. The following variables are used in Figure 5-4.

H	**=**	**total energy head**
y	**=**	**depth of water**
$V^2/2g$	**=**	**velocity head**
EGL	**=**	**energy grade line**
S_o	**=**	**slope of bottom**
h_f	**=**	**head loss**
V	**=**	**mean velocity**
Z	**=**	**height above datum**
HGL	**=**	**hydraulic grade line**
S_f	**=**	**slope of EGL**
S_w	**=**	**slope of HGL**
P/g	**=**	**pressure head**

The sum of the pressure head, P/g and the elevation head, y, is called the piezometric head. This is the height to which water would rise in a pipe with one of it's ends inserted into an arbitrary point in the flow field. The line connecting points of equal piezometric measurements along the path of flow is called the hydraulic grade line.

$$HGL = \frac{P}{g} + y \qquad \textbf{(5-8)}$$

where:

HGL	**=**	**hydraulic grade line, in feet**
P/g	**=**	**pressure head, in feet**
y	**=**	**elevation head, in feet**

The energy grade line is equal to the hydraulic grade line plus the velocity head, $V^2/2g$.

$$EGL = \frac{P}{g} + y + \frac{V^2}{2g}$$

$$EGL = \frac{P}{g} + y + \frac{V^2}{2g} \qquad \textbf{(5-9)}$$

where:

EGL	**=**	**energy grade line, in feet**
P/g	**=**	**pressure head, in feet**
y	**=**	**elevation head, in feet**
V^2/2g	**=**	**velocity head, in feet**

5.4 ENERGY GRADIENT AND PROFILE OF STORM SEWERS

When using Bernoulli's Equation in the hydraulic design of storm sewers, all energy losses must be accounted for. These losses are commonly referred to as head losses, and are classified as either friction losses or minor losses. Friction losses are due to forces between the fluid and the boundary material, while minor losses are a result of the geometry of sewer appurtenances such as manholes, bends, and either expanding or contracting transition. Minor losses can constitute a major portion of the total head loss.

When storm sewer systems are designed for full flow, the designer shall establish the head losses caused by flow resistance in the conduit, changes of momentum and interference at junctions and structures. This information is then used to establish the design water surface elevation at each structure.

It is not necessary to compute the energy grade line of a conduit section if all three of the following conditions are satisfied;

A. **The slope(s) and the pipe size(s) are chosen so that the slope is equal to or greater than friction slope.**

B. **The inside top surfaces (soffit) of successive pipes are lined up at changes in size.**

C. **The water surface at the point of discharge will not rise above the top of the outlet.**

In such cases the pipe will not operate under pressure and the slope of the water surface under capacity discharge will approximately parallel the slope of the invert of the pipe.

In the absence of these conditions or when it is desired to check the system against a larger flood than that used in sizing the pipes, the hydraulic and energy grade lines shall be computed and plotted. The friction head loss shall be determined by direct application of Manning's Equation. Minor losses due to turbulence at structures shall be determined by the

procedure described below. If the storm sewer system could be extended at some future date, present and future operation of the system must be considered.

The final hydraulic design of a system should be based on the procedures set forth in this Manual. The conduits are treated as either open channel flow or flowing full flow, as the case may be. For open channel flow, the energy grade line is used as a base for calculation, while the hydraulic grade line is used for flowing full flow. The following procedure is applicable to storm sewers flowing with a free water surface, or open channel flow. The basic approach to the design of open channel flow in storm sewers is to calculate the energy grade line along the system. It is assumed that the energy grade line is parallel to the pipe grade and that any losses other than pipe friction may be accounted for by assuming point losses at each manhole.

5.4.1 Friction Head Loss

The pipe friction can be evaluated by modifying the Manning's Equation.

$$S_f = \left[\frac{Qn}{1.49AR^{2/3}}\right]^2 \qquad \textbf{(5-10)}$$

where:

S_f	=	**slope of pipe, in feet per foot**
Q	=	**pipe flow, in cubic feet per second**
n	=	**Manning's roughness coefficient**
A	=	**cross-sectional area of pipe, in square feet**
R	=	**hydraulic radius, A/WP, in feet**
WP	=	**wetted perimeter, in feet**

The pipe friction head loss is equal to the friction slope of the pipe multiplied by the length.

$$h_f = S_L L \qquad \textbf{(5-11)}$$

where:

h_f	=	**pipe friction head loss, in feet**
S_L	=	**friction slope of pipe, in feet per foot**
L	=	**length of pipe, in feet**

5.4.2 Minor Head Losses at Structures

The head losses at structures shall be determined for inlets, manholes, wye branches, or bends in the design of full flow closed conduits. Total energy losses at structures include minor losses, h_j, and the change in velocity head, h_v. See Figures 5-7 and 5-8 for details of each case. Minimum head loss used at any structure shall be 0.10 feet, unless otherwise approved.

Short radius bends may be used on 24 inch and larger pipes when flow must undergo a direction change at a junction or bend. Reductions in head loss at manholes may be realized in this way. A manhole shall be located at the end of such short radius bends if required for operation and maintenance.

The basic equations for minor head losses, where there is significant upstream and downstream velocity, takes the form as set forth below with the various conditions of the coefficient, k_m, shown in Tables 5-5, 5-6 and 5-7.

$$h_f = k_m \left[\frac{V_2^2 - V_1^2}{2g} \right] \qquad \textbf{(5-12)}$$

where:

h_j	=	**junction or structure minor head loss, in feet**
k_m	=	**junction or structure coefficient of loss, in feet**
V_2	=	**velocity in downstream pipe, in feet per second**
V_1	=	**velocity in upstream pipe, in feet per second**
g	=	**acceleration of gravity, 32.2 feet per second squared**

In the case where the initial velocity is negligible or when there is no velocity change, the basic equation for head loss becomes:

$$h_f = k_m \left[\frac{V_2^2}{2g} \right] \qquad \textbf{(5-13)}$$

The parameters are defined as above.

TABLE 5-5 Junction or Structure Minor Loss Coefficient, k_m

Case Number	Reference Figure	Description of Condition	Coefficient k_m
I	**5-5**	**Inlet on Main Line**	**0.50**
II	**5-5**	**Inlet on Main Line with Branch Lateral**	**0.25**
III	**5-5**	**Manhole on Main Line with 45° Branch Lateral**	**0.25**
IV	**5-5**	**Manhole on Main Line with 90° Branch Lateral**	**0.25**
V	**5-6**	**45° Wye Connection or cut-in**	**0.75**
VI	**5-6**	**Inlet or Manhole at Beginning of Line**	**1.25**
VII	**5-6**	**Conduit on Curves for 90° ***	
		Curve radius = diameter	**0.50**
		Curve radius = 2 to 8 diameters	**0.40**
		Curve radius = 8 to 20 diameters	**0.25**
VIII	**5-6**	**Bends where Radius is Equal to Diameter**	
		90° Bend	**0.50**
		60° Bend	**0.43**
		45° Bend	**0.35**
		22-1/2° Bend	**0.20**
		Manhole on Line with 60° Lateral	**0.35**
		Manhole on Line with 22-1/2° Lateral	**0.75**

*** Where bends other than 90° are used, the 90° bend coefficient can be used with the following percentage factor applied:**
60° Bend--85%; 45° Bend--70%; 22-1/2° Bend--40%

Obstructions

The values of the coefficient, k_m, for determining the loss of head due to obstructions in pipes are shown in Table 5-6, and the coefficients are used in the following equation to calculate the head loss at the obstruction:

$$h_j = k_m \left[\frac{V_2^2}{2g} \right] \qquad \textbf{(5-14)}$$

where:

h_j	=	**minor head loss, in feet**
k_m	=	**head loss coefficient**
V_2	=	**velocity in smaller pipe, in feet per second**
g	=	**acceleration of gravity, 32.2 feet per second squared**

TABLE 5-6 Head Loss Coefficients Due to Obstructions

$\frac{A^*}{A}$	k_m
1.05	**0.10**
1.10	**0.21**
1.20	**0.50**
1.40	**1.15**
1.60	**2.40**
1.80	**4.00**
2.00	**5.55**
2.20	**7.05**
2.50	**9.70**
3.00	**15.00**
4.00	**27.30**
5.00	**42.00**
6.00	**57.00**
7.00	**72.50**
8.00	**88.00**
9.00	**104.00**
10.00	**121.00**

*** $\frac{A}{A}$ = Ratio of area of pipe to area of opening at obstruction**

Expansions and Contractions

The values of the coefficient k_m for determining the loss of head due to sudden enlargements and sudden contractions in pipes are shown in Table 5-7. These coefficients are used in the following equation to calculate the head loss at the change in section:

$$h_j = k_m \left[\frac{V_2^2}{2g} \right] \qquad \textbf{(5-15)}$$

where:

h_j	**=**	**minor head loss, in feet**
k_m	**=**	**head loss coefficient**
V_2	**=**	**velocity in smaller pipe, in feet per second**
g	**=**	**acceleration of gravity, 32.2 feet per second squared**

TABLE 5-7 Head Loss Coefficients for Expansions and Contractions

$\frac{D2}{D1}$*	Sudden Expansions k_m	Sudden Contractions k_m
1.2	**0.10**	**0.08**
1.4	**0.23**	**0.18**
1.6	**0.35**	**0.25**
1.8	**0.44**	**0.33**
2.0	**0.52**	**0.36**
2.5	**0.65**	**0.40**
3.0	**0.72**	**0.42**
4.0	**0.80**	**0.44**
5.0	**0.84**	**0.45**
10.0	**0.89**	**0.46**
	0.91	**0.47**

*** $\frac{D2}{D1}$ = Ratio of larger to smaller diameter.**

5.5 DESIGN PROCEDURE FOR STORM SEWER SYSTEMS

5.5.1 Preliminary Design Considerations

The sequence of steps to be used in designing storm sewer systems should include the following:

A. Prepare a drainage map of the entire area to be drained by proposed improvements which includes streets, lot lines, underground utilities and denote all directions of flow for each lot and street. Contour maps serve as excellent drainage area maps when supplemented by field reconnaissance.

B. Sketch one or more tentative systems to drain the entire area which includes the streets, storm sewers, locations of minor swales, ditches, and culverts. Also, include the tentative locations of all inlets to the storm sewers.

C. Outline the drainage area for each inlet in accordance with present and future street development.

D. Indicate on each drainage area a code identification number, the size of area, the direction of surface runoff by small arrows, and the coefficient of runoff for the area.

E. Establish inlet time of concentration and rainfall intensity for each inlet for the design storm.

F. Establish the typical cross section of each street.

G. Establish permissible spread of water on all streets within the drainage area.

H. Include Steps A through G with plans submitted for review. The drainage map submitted shall be suitable for permanent filing and shall be a good quality reproducible copy.

5.5.2 Storm Sewer System

After the computation of the quantity of storm runoff entering each inlet, the storm sewer system required to carry the runoff is designed. It should be borne in mind that the quantity of flow to be carried by any particular section of the storm sewer system is not the sum of the inlet design quantities of all inlets above that section of the system, but is less than the straight total. This situation is due to the fact that as the time of concentration increases the rainfall intensity decreases.

Determining Type of Flow

Before treating conduit as open channel, checks must be made to determine the type of flow. To do this, calculations must proceed upstream, verifying progressively that the hydraulic grade line is below the crown of the pipe.

A. Discharge Point

The discharge point of the sewer usually establishes a starting point. If the discharge is submerged, as when the water level of the receiving water body is above the crown of the pipe, the exit loss should be added to the water level and calculations for head loss in the sewer started from this point. If the hydraulic grade line is above the pipe crown at the next upstream manhole, full flow calculations may proceed. If the hydraulic grade line is below the pipe crown at the upstream manhole, then open channel flow calculations must be used at the manhole.

When the discharge is not submerged, a flow depth must be determined at some control section to allow calculations to proceed upstream. If the tailwater depth is less than $(D + d_c)/2$, set the tailwater elevation equal to $(D + d_c)/2$, where D equals the pipe in diameter, and d_c equals the critical depth, both in feet, otherwise use the tailwater depth. The hydraulic grade line is

then projected to the upstream manhole. Full flow calculations may be utilized at the manhole if the hydraulic grade is above the pipe crown.

The assumption of straight hydraulic grade lines is not entirely correct, since backwater and drawdown exists, but should be accurate enough for the size pipes usually considered as storm sewers. If the designer feels that additional accuracy is justified, as with very large conduits or where the result will have a very significant effect on design, backwater and drawdown curves may actually be calculated.

B. Within System

At each manhole the same type of procedure as outlined for the discharge point must be repeated.

The water depth in each manhole must be calculated to verify that the water level is above the crown of all pipes. Whenever the level is below the crown of a pipe, open channel methods are applicable.

Storm Sewer Pipe

The ground-line profile is used in conjunction with the previous runoff calculations. When the initial energy gradient is established and the design discharge is determined, a Manning's flow chart may be used to determine the pipe size and velocity. (Figures 5-1 and 5-3 or Figures 5-4 and 5-5).

Velocities can be read directly from a Manning's flow chart based on a given discharge, pipe size and slope. (Figure 5-3).

Junctions, Inlets and Manholes

A. Determine the invert elevations at the upstream end and downstream end of the pipe section in question. The elevation of the invert of the upstream end of pipe is equal to the elevation of the downstream end of pipe (invert) plus the product of the length of pipe and the pipe gradient, S_o.

B. Determine the velocity of flow for incoming pipe (main line) at junction, inlet, or manhole at design point.

C. Determine the velocity of flow for outgoing pipe (main line) at junction, inlet, or manhole at design point.

D. Compute velocity head for outgoing velocity (main line) at junction, inlet, or manhole at design point.

E. Compute velocity head for incoming velocity (main line) at junction, inlet, or manhole at design point.

F. Determine head loss coefficient, k_m, at junction, inlet, or manhole at design point from Tables 5-5, 5-6, 5-7 or Figures 5-5 and 5-6.

G. Compute head loss at junction, inlet or manhole.

$$h_j = k_m \left[\frac{V_2^2 - V_1^2}{2g} \right]$$

H. Compute energy gradient at upstream end of junction as if junction were not there.

I. Add head loss to energy gradient elevation determined to obtain energy gradient elevation at upstream end of junction.

All information shall be recorded on the plans or in tabular form convenient for review.

Major Storm System

Check the proposed system for the 100-year major storm event. Modify the proposed system or provide additional flow capacity as required to accommodate the major storm runoff according to the requirements stated in Sections 2, 3 and 4.

5.5.3 Inlet System

Determining the size and location of inlets is largely a trial-and-error procedure. The following steps will serve as a guide for the procedure to be used.

A. Beginning at the upstream end of the project drainage basin, outline a trial subarea and calculate the runoff from it.

B. Compare the calculated runoff to allowable street capacity. If the calculated runoff is greater than the allowable street capacity reduce the size of the trial subarea. If the calculated runoff is less than street capacity, increase the size of the trial subarea.

Repeat this procedure until the calculated runoff equals the allowable street capacity. This is the first point at which a portion of the flow must be removed from the street. The percentage of flow to be removed will depend on street capacities versus runoff entering the street downstream.

C. Record the drainage area, time of concentration, runoff coefficient and calculated runoff for the subarea. This information shall be recorded on the plans or in tabular form convenient for review.

D. **If an inlet is to be used to remove water from the street, size the inlet(s) and record the inlet size, amount of intercepted flow, and amount of flow carried over (bypassing the inlet).**

E. **Continue the above procedure for other subareas until a complete system of inlets has been established. Compare the time of concentration for a subarea to the time of concentration for the upstream contributing areas. Use the longer time of concentration to calculate the discharge at the inlet. Remember to account for carry-over from one inlet to the next. Add the carry-over to the calculated discharge to obtain the design discharge at the inlet. The difference between the inlet discharge and the design discharge is carry-over flow and is bypassed to the next downstream inlet.**

F. **After a complete system of inlets has been established, modification should be made to accommodate special situations such as point sources of large quantities of runoff and variation of street alignments and grades.**

G. **Record information as in Steps C and D for all inlets.**

H. **After the inlets have been located and sized the inlet pipes can be designed.**

I. **Inlet pipes are sized to carry the volume of water intercepted by the inlet. Inlet pipe capacities may be controlled by the gradient available, or by entry conditions of the pipe at the inlet. Inlet pipe sizes should be determined for both inlet and outlet conditions and the larger size thus obtained.**

5.5.4 Inlet Lateral Pipe Design

The design of an inlet lateral pipe to the trunk line is an iterative process. The designer must analyze the lateral for outlet and inlet control. Figure 5-9 is a definition sketch showing outlet and inlet control flow conditions. The figure assumes that the trunk line is flowing full and is not surcharged, or under pressure flow.

Outlet Control

The head or energy required to pass a given discharge through a lateral pipe flowing in outlet control and flowing full throughout its length, is comprised of three components. These include an exit loss h_o, an entrance loss h_e, and a friction loss h_f. The energy is expressed by the following equation.

$$h = h_o + h_e + h_f \qquad \textbf{(5-16)}$$

where:

h = total head loss, in feet

h_o = exit loss, in feet

$$= \quad k_o \frac{V^2}{2g}$$

k_o = exit coefficient, equal to 1.0

h_e = entrance loss, in feet

$$= \quad k_e \frac{V^2}{2g}$$

k_e = entrance coefficient

h_f = friction loss, in feet

$$= \quad \left[\frac{185n^2L}{d^{4/3}}\right]\frac{V^2}{2g}$$

n = Manning's roughness coefficient

L = length of pipe, in feet

d = diameter of lateral pipe, in feet

V = velocity of flow, in feet per second

g = acceleration of gravity, 32.2 feet per second squared

Simplifying Equation 5-4, for full flow, yields Equation 5-17

$$h = \left[1 + k_e + \frac{185n^2L}{d^{4/3}}\right]\frac{V^2}{2g} \qquad \textbf{(5-17)}$$

where the terms are as defined above.

The pipe discharge can be computed by the following equation for full flow:

$$Q = A\left[\frac{2gh}{1 + k_e + \frac{185n^2L}{d^{4/3}}}\right]^{0.5} \qquad \textbf{(5-18)}$$

where:

Q = discharge, in cubic feet per second

A = cross-sectional area, in square feet

Figures 5-10 through 5-18 have been developed for inlet lateral pipe design with outlet control for pipe diameters of 12 inch to 36 inch. An entrance coefficient, k_e, 0.5 and Manning's "n" value of 0.013 was assumed in the development of the figures. The head is defined as shown in Figure 5-9, with full flow in the trunk line and lateral.

If outlet control governs and the HW is higher than is acceptable, select a larger size until HW is acceptable for outlet control.

Inlet Control

The head required to pass a discharge through a pipe flowing in inlet control is controlled at the entrance by the depth of headwater (HW) and the entrance geometry. Figure 5-9 shows an inlet control sketch. The headwater, HW, is expressed by the following equation:

$$HW = H + \frac{d}{2} \qquad \textbf{(5-19)}$$

where:

HW = headwater depth, in feet

H = hydraulic head, distance from the center of the lateral pipe to the water surface elevation, in feet

d = diameter of lateral pipe, in feet

The discharge may be computed by the following equation:

$$Q = 0.6A\sqrt{2gH} \qquad \textbf{(5-20)}$$

where:

Q	**=**	**discharge, in cubic feet per second**
A	**=**	**cross-sectional area of lateral pipe, in square feet**
g	**=**	**acceleration of gravity, 32.2 feet per square second**
H	**=**	**hydraulic head, in feet**

If the HW is greater or less than allowable, try another pipe size until HW is acceptable for inlet control. Figure 5-19 can be used to determine the headwater for inlet lateral pipe design under inlet control. The head in Figure 5-19 is defined as the summation of the hydraulic head, pipe radius, and a curb height of 9 inches.

5.5.5 Storm Sewer System Design by the Rational Method

The Rational Method is the most commonly used method for storm sewer system design. Figure 5-20 is a computation form for designing storm sewer system by the Rational Method. Columns 1 through 15 of the computation sheet cover the tabulation for runoff computations. After the computation of the quantity of storm runoff entering each inlet, the size and gradient of pipe required to carry the design storm is determined. It should be kept in mind that the quantity of flow to be carried by any particular section of storm sewer is not the sum of the inlet design quantities of all inlets above that section of pipe, but is less than the total. This is due to the fact that as the time of concentration increases, the rainfall intensity decreases. Columns 16 through 29 of the computation sheet cover the minimum necessary hydraulic requirements to establish the hydraulic grade line for a storm sewer.

The following is an explanation for completing the storm sewer computation form by the Rational Method.

Column 1	**From Design Point**	**Enter the storm sewer inlet point number. Design should start at the farthest upstream point.**
Column 2	**To Design Point**	**Enter the storm sewer inlet point number of inlet point immediately downstream. In numbering inlets and manholes, it is customary to start numbering inlets and manholes at the beginning of the storm drainage system, proceeding upstream.**
Column 3	**Distance**	**Enter the distance (in feet) between storm sewer inlet point shown in Column 1 and 2. Column 1 stationing minus Column 2 stationing.**
Column 4	**Drainage Area Number**	**Record the identification code number of each different drainage area to correspond to the numbers shown on the drainage area map.**

Column 5	**Drainage Area**	**Record the area in acres for each of the individual areas of Column 4.**
Column 6	**Total Drainage Area**	**Record the total drainage area in acres within the system corresponding to storm sewer inlet point shown in Column 1.**
Column 7	**Runoff Coefficient**	**Record the runoff coefficient "C" for each drainage area shown in Column 5.**
Column 8	**Incremental "CA"**	**Multiply Column 5 by Column 7 for each area.**
Column 9	**Total "CA"**	**Determine the total "CA" for the drainage system corresponding to the inlet or manhole shown in Column 1.**
Column 10	**t_c - Inlet Time**	**Determine inlet time of concentration.**
Column 11	**t_c - Sewer Time**	**Determine flow time in sewer in minutes. The flow time in sewer is equal to the length from Column 3 divided by 60 times the velocity of flow through the sewer.**
Column 12	**t_c - Total Time**	**Total time of concentration in minutes. Column 10 plus Column 11.**
Column 13	**Design Frequency**	**Design frequency.**
Column 14	**Intensity**	**Intensity of rainfall in inches per hour corresponding to time of concentration shown in Column 12. Figures 2-1 or 2-2 Intensity-Duration-Frequency Curves.**
Column 15	**Discharge**	**Design discharge in cfs. Column 9 times Column 14.**
Column 16	**Pipe Size**	**The size of pipe is chosen in such a manner that the pipe when, flowing full, will carry an amount of flow equal to or greater than the computed discharge with a desirable velocity.**
Column 17	**Frictional Gradient Slope, S_f**	**The slope of the frictional gradient (energy gradient) is chosen so that the pipe, when flowing full, will carry an amount of flow equal to or greater than the computed discharge. The pipe shall be constructed on a grade such that the inside crown of the pipe coincides with energy gradient or is below the developed energy gradient when flowing full.**
Columns 18	**Energy Gradient**	**Record the energy gradient elevations at the**

and 19	**Elevation**	**upstream end and downstream end of pipe section in question. The elevation of the energy gradient of the upstream end of pipe is equal to the elevation of the downstream (energy gradient) plus the product of Column 3 and Column 17.**
Column 20	**Inflow Velocity**	**Velocity of flow in incoming pipe (main line) at junction, inlet or manhole at design point. (Column 1).**
Column 21	**Outflow Velocity**	**Velocity of flow in outgoing pipe (main line) at junction, inlet or manhole at design point. (Column 1).**
Column 22	**Velocity Head**	**Velocity head for outgoing velocity (main line) at junction inlet or manhole at design point (Column 1).**
Column 23	**Velocity Head**	**Velocity head for incoming velocity (main line) at junction inlet or manhole at design point (Column 1).**
Column 24	**Head loss Coefficient**	**Head loss coefficient "k_m", at junction, inlet or manhole at design point from Tables 5-5 through 5-7 or Figures 5-7 and 5-8.**
Column 25	**Minor loss**	**Multiply Column 23 by Column 24.**
Column 26	**Head loss**	**Column 22 minus Column 25.**
Column 27	**Elevation of EGL**	**Column 18 plus Column 26.**
Column 28	**Inflow Elevation**	**Invert elevation at design point for incoming pipe.**
Column 29	**Outflow Elevation**	**Invert elevation at design point for outgoing pipe.**

5.6BIBLIOGRAPHY

1. **Albertson, Maurice L., Barton, James R., and Simons, Daryl B., Fluid Mechanics for Engineers. Prentice-Hall, Inc., Englewood Cliffs, New Jersey, 1960.**

2. **American Society of Civil Engineers and the Water Pollution Control Federation, Design and Construction of Sanitary and Storm Drainage A.S.C.E. Manual of Engineering Practice, No. 37 (W.P.C.F. Manual of Practice, No. 9) American Society of Civil Engineers, New York, New York, 1960.**

3. **Chow, Ven Te, Open-Channel Hydraulics, McGraw-Hill Book Company, Inc., New York, New York, 1959.**

4. **State of Nebraska Department of Roads, Road Design Manual, Lincoln, Nebraska, March 1984.**

5. **Pizer Incorporated, HYDRA Storm and Sanitary Sewer Analysis Software, Version 5.0, Greenbank, Washington, 1991.**

6. **Portland Cement Association, Design and Construction of Concrete Sewers, Portland Cement Association, Skokie, Illinois, 1968.**

7. **Portland Cement Association, Handbook of Concrete Culvert Pipe Hydraulics, Portland Cement Association, Chicago, Illinois, 1964.**

8. **Sangster, W.M., Wood, H.W., Smendon, E.T., and Bossy, H.G., Pressure Changes of Storm Drainage Junctions, Engineering Series Bulletin No. 41, University of Missouri, Columbia, Missouri, 1958.**

9. **Steel, Ernst, W., Water Supply and Sewerage, McGraw-Hill Book Co., Inc., New York, New York, 1960.**

10. **City of Waco, Texas, Engineering Department, et al, Drainage Criteria Manual, Waco, Texas, 1959.**

11. **Wright-McLaughlin Engineers, Urban Storm Drainage Criteria Manual, Denver Regional Council of Governments, Colorado, 1969.**

SECTION 6
OPEN CHANNELS

Page

6.1 INTRODUCTION 6-3

6.2 DESIGN CRITERIA 6-3
- 6.2.1 Design Frequency 6-3
- 6.2.2 Maintenance Easement 6-4

6.3 TYPES OF CHANNELS 6-4
- 6.3.1 Natural Channels 6-4
- 6.3.2 Grass-Lined Channels 6-4
- 6.3.3 Concrete-Lined Channels 6-4
- 6.3.4 Rock-Lined Channels 6-5

6.4 CHANNEL DISCHARGE 6-5
- 6.4.1 Manning's Equation 6-5
- 6.4.2 Uniform Flow 6-6
- 6.4.3 Critical Flow 6-6
- 6.4.4 Gradually Varied Flow 6-8
- 6.4.5 Rapidly Varied Flow 6-9
- Weir Flow 6-9
- Hydraulic Jump 6-10

6.5 DESIGN CONSIDERATIONS 6-10

6.6 DESIGN STANDARDS 6-17
- 6.6.1 Natural Channels 6-17
- 6.6.2 Grass-Lined Channels 6-18
- 6.6.3 Concrete-Lined Channels 6-21
- 6.6.4 Rock-Lined Channels 6-22
- 6.6.5 Other Channel Linings 6-25

6.7 WATER SURFACE PROFILE ANALYSIS 6-26

6.8 SUPERCRITICAL FLOW 6-27

6.9 FLOOD PROOFING 6-27

6.10 ENERGY DISSIPATORS 6-28
6.10.1 Impact-Type Stilling Basins 6-28
6.10.2 Plunge Pools 6-28
6.10.3 Drop Structures 6-29
6.10.4 Chute Structures 6-30

6.11 FLOW TRANSITIONS 6-31

6.12 RIPRAP 6-31

6.13 SCOUR 6-31

6.14 BIBLIOGRAPHY 6-33

LIST OF TABLES

Table Page

6-1 Geometric Elements of Channel Sections 6-11
6-2 Composite Roughness Coefficients for Unlined Open Channels 6-12
6-3 Typical Roughness Coefficients for Open Channels 6-13
6-4 Manning's Roughness Coefficients for Straight Channels Without Shrubbery or Trees 6-15
6-5 Maximum Permissible Design Open Channel Flow Velocities in Earth 6-16
6-6 Maximum Permissible Velocities for Earth Channels with Varied Grass Linings and Slopes 6-17

LIST OF FIGURES

Figure Page

6-1 Nomograph for Solution of Manning's Equation 6-35
6-2 Uniform Flow for Trapezoidal Channels 6-36
6-3 Definition Sketch of Specific Head 6-37
6-4 Typical Grassed-Lined Channels 6-38
6-5 Impact-Type Energy Dissipators 6-39
6-6 Rectangular Inclined Drop 6-40
6-7 Control and Pipe Inlet 6-41
6-8 Typical Rectangular Chutes 6-42
6-9 Stilling Pool on Pipe Chute 6-43
6-10 Channel Transition Types 6-44

6.1 INTRODUCTION

Open channels designed for use in the major drainage system have significant advantages in regard to cost, capacity, multiple use for recreational and aesthetic purposes, and potential for instream storage and groundwater recharge. Disadvantages include potential right-of-way constraints and maintenance costs. Careful planning and design are needed to increase the benefits and to minimize the disadvantages.

Hydraulic structures include, stilling basins, channel drops, transitions, baffle chutes, and many other specific drainage works. Their shape, size, and other features vary widely depending upon the function to be served on a specific project. In general, a hydraulic structure is used to retain, regulate, or control the flow of water.

The ideal open channel is a stabilized water course developed by nature over time, characterized by stable bed and banks. The benefits of such a channel are:

A. Available channel storage can decrease peak flows.

B. Maintenance needs can be low when the channel is properly stabilized.

C. Natural subsurface infiltration of flows is provided.

D. Native vegetation and wildlife may not have to be disturbed.

E. The channel can provide a desirable green belt and recreational area adding significant social benefits.

Generally speaking, a stabilized natural channel, or the artificial, man-made channel which most nearly conforms to the character of a stabilized natural channel, is the most efficient and the most desirable.

Channel stability, particularly in unprotected alluvial materials, is a problem in urban hydrology because of the significant increase in low flow and peak storm runoff rates. A natural channel must be studied in sufficient detail to determine the measures needed to mitigate potential bottom scour and bank cutting. Erosion control measures, which will preserve the natural appearance of the channel, can be provided at reasonable cost without sacrificing hydraulic efficiency. This section provides the necessary criteria and methodology for selection and design of open channels.

6.2 DESIGN CRITERIA

6.2.1 Design Frequency

Open channels shall be designed such that flow is contained within channel banks for the 25-year storm and the minimum finished floor elevation for residential dwellings or public, commercial and industrial buildings shall not be less than one (1) foot above the inundation level for the major storm event, unless the building is flood-proofed.

6.2.2 Maintenance Easement

A dedicated maintenance easement shall be provided with all drainage channels as specified in Section 1.4.7.

6.3 TYPES OF CHANNELS

Channels are defined as natural or artificial. Natural channels include all water courses that have developed by the erosion process. Artificial channels are those constructed or significantly altered by human effort and include roadside ditches and grassed or improved channels.

6.3.1 Natural Channels

Many natural channels have mild slopes, are reasonably stable, and are not in a state of serious degradation or aggradation. However, if a natural channel is to be used for carrying storm runoff from an urbanizing area, the altered nature of the runoff peaks and volumes from urban development can and will cause scour and erosion. Hydraulic analyses will be required for natural channels in order to identify the erosion tendencies. Some on-site modification of the natural channel may be required to assure a stabilized condition.

The investigations necessary to assure that the natural channels will be adequate are different for every waterway. The engineer/designer must prepare cross sections of the channel, define the water surface profile for the design and major flood, investigate the bed and bank material to determine erosion tendencies, and study the bank slope stability of the channel under flow conditions. Supercritical flow does not normally occur in natural channels, but calculations must be made to assure that the results do not reflect supercritical flow.

6.3.2 Grass-Lined Channels

Grass-lined channels are the most desirable of the artificial channels. The grass will stabilize the body of the channel, consolidate the soil mass of the bed, check the erosion on the channel surface, and control the movement of soil particles along the channel bottom. The channel storage, the lower velocities, and the greenbelt multiple-use-benefits obtained create significant advantages over other artificial channels.

6.3.3 Concrete-Lined Channels

Concrete linings must be designed to withstand the various forces and actions which tend to overtop the bank, deteriorate the lining, erode the soil beneath the lining, and erode unlined areas. Maintenance responsibility should be a part of any drainage plan requiring concrete-lined channels. If the project constraints dictate the use of a concrete channel, such use shall be allowed only upon approval by the City Engineer or Director of Public Works.

6.3.4 Rock-Lined Channels

Rock-lined channels are constructed from ordinary riprap or wire enclosed riprap (gabions). The rock lining increases the turbulence resulting in a loss of energy and increased flow retardance. The rock lining also permits a higher design velocity and therefore a steeper design slope than for grass-lined channels. Rock linings are also used for erosion control at culvert/storm drain outlets, at sharp channel bends, at channel confluences, and at locally steepened channel sections. Incorrectly designed rock-lined channels can result in excessive maintenance requirements. Correct sizing and bedding are essential to good performance. Maintenance responsibility should be a part of any drainage plan utilizing rock-lined channels.

If the project constraints dictate the use of a riprap or gabion lining, such use shall be allowed only upon approval of the City Engineer or Director of Public Works. Riprap for the purposes of local erosion control is permitted only if vegetation is unsuitable.

6.4 CHANNEL DISCHARGE

Understanding the basic concepts of open channel flow is necessary to properly design channels. In open channel flow, the water surface is not confined. Surface configuration, flow pattern and pressure distribution within the flow depends on gravity. In rigid-boundary open channel flow, no deformation or movement of the bed and banks is assumed, whereas in mobile-boundary hydraulics, bed configuration is considered a function of the flow. Discussions in this section pertain primarily to rigid-boundary open-channel flow, since they are most appropriate to open channel design in the Temple area.

Designing a stable alluvial channel (one without a channel lining) or a stable lined channel under dynamic channel conditions requires an understanding of sediment transport and stream channel response. For example, unlined channels must be designed to minimize excessive scour while lined channels must be designed to prevent deposition of sediments. Unlined channels are most successful when designed under the concept of dynamic equilibrium. These topics and other related design considerations are discussed in detail in basic fluid mechanics and sediment transport textbooks.

All variables used in fluid mechanics and hydraulics fall into one of three classes: those describing the boundary geometry, those describing the flow, and those describing the fluid. Various combinations of these variables define parameters that describe the state of flow in open channels.

6.4.1 Manning's Equation

Careful attention must be given to the design of drainage channels to provide adequate capacity and allow for minimum maintenance. The hydraulic characteristics of open channels shall be determined by using Manning's Equation, commonly expressed as:

$$Q = \frac{1.49}{n} AR^{2/3}S^{1/2} \tag{6-1}$$

where:

Q	=	channel discharge, in cubic feet per second
A	=	cross-sectional area of channel flow, in square feet
R	=	hydraulic radius of channel, A/WP , in feet
WP	=	wetted perimeter of channel flow, in feet
S	=	slope of the energy gradient, in feet per foot
n	=	Manning's coefficient of channel roughness

A graphical solution for the Manning's Equation is presented on Figure 6-1.

6.4.2 Uniform Flow

Manning's Equation is an accurate representation of flow conditions only when the rate of flow and channel characteristics (roughness, cross section geometry and slope) remain relatively constant, hence, uniform flow. For a channel of given roughness, discharge and slope, there is only one possible depth for maintaining a uniform flow. This depth is commonly expressed as the normal depth. The corresponding discharge is expressed as the normal discharge. Under uniform flow conditions, the water surface profile is assumed parallel to both the energy grade line and the bottom of the channel.

Uniform flow is most often considered a theoretical abstraction. A channel is commonly designed on the assumption it will convey uniform flow at normal depth, but it is difficult, if not impossible, to evaluate. The actual flow depth can differ from the theoretical uniform flow depth.

Normal depth computations are made so frequently that it is convenient to use nomographs for various types of open channel cross sections to eliminate the need for trial and error solutions. A nomograph for estimating uniform flow for trapezoidal channels is shown in Figure 6-2.

6.4.3 Critical Flow

Flowing water contains potential and kinetic energy. The relative values of the potential and kinetic energy are important in the analysis of open channel flow. The potential energy is represented by the depth of water plus the elevation of the channel bottom above a datum. The kinetic energy is represented by the velocity head, $V^2/2g$. The specific energy or specific head is equal to the depth of water plus the velocity head.

$$H = d + \frac{V^2}{2g} \tag{6-2}$$

where:

H	=	specific energy head, in feet
d	=	depth of flow, in feet
V	=	average channel flow velocity, in feet per second
g	=	acceleration of gravity, 32.2 feet per second squared

When depth of flow is plotted against specific energy for a given channel discharge at a section, the resulting curve shows that, at a given specific energy, there are two possible flow depths (see Figure 6-3). At minimum energy, only one depth of flow exists. This is known as the critical depth. At critical depth, the following relationship applies for rectangular sections:

$$d_c = \frac{V^2}{g} \tag{6-3}$$

where:

d_c	=	critical depth, in feet
V	=	average channel flow velocity, in feet per second
g	=	acceleration of gravity, 32.2 feet per second squared

The effect of gravity upon the state of flow is represented by a ratio of the inertial forces to gravity forces. This ratio is known as the Froude Number, Fr, and is used to categorize the flow. The Froude Number is defined by Equation 6-4 for a rectangular section.

$$Fr = \frac{V}{(gd)^{0.5}} \tag{6-4}$$

where:

Fr	=	Froude Number
V	=	average channel flow velocity, in feet per second
g	=	acceleration of gravity, 32.2 feet per second squared
d	=	depth of flow, in feet

The critical state of flow through a rectangular channel is characterized by several important conditions:

A. The specific energy is a minimum for a given discharge.

B. The discharge is a maximum for a given specific energy.

C. The specific force is a minimum for a given discharge.

D. The velocity head is equal to half the hydraulic depth in a channel of small slope.

E. The Froude Number is equal to 1.0.

If the critical state of flow exists throughout an entire reach, the channel flow is critical and the channel slope is at critical slope, S_c. A flow at or near the critical state is unstable, because minor changes in specific energy, such as from channel debris, will cause a major change in depth.

In the analysis of nonrectangular channels, the Froude Number equation is rewritten. The depth of flow is defined as the cross sectional area divided by the top width.

$$Fr = \left[\frac{Q^2 B}{gA^3}\right]^{0.5} \qquad (6\text{-}5)$$

where:

Fr	=	Froude Number
Q	=	discharge in channel, in cubic feet per second
B	=	top width of channel, in feet
g	=	acceleration of gravity, 32.2 per second squared
A	=	cross-sectional area, in square feet

It can be shown that Fr = 1 for critical flow. If the Froude Number is greater than 1, the flow is supercritical, but when the Froude Number is less than 1, the flow is subcritical.

6.4.4 Gradually Varied Flow

Gradually varied flow is used to describe a type of steady nonuniform flow. The change in the depth and velocity occur gradually over a considerable length of channel and the nonuniformity of the flow is not pronounced. The most common occurrence of gradually varied flow in storm drainage is the backwater created by culverts, storm drain inlets, or channel constrictions. For these conditions, the flow depth will be greater than normal depth in the channel and the water surface profile must be computed using backwater techniques.

6.4.5 Rapidly Varied Flow

Rapidly varied flow is characterized by very pronounced curvature of the streamlines. The change in curvature may become so abrupt that the flow profile is virtually broken, resulting in a state of high turbulence. Whereas there are several mathematical solutions to some cases of rapidly varied flow, the practical hydraulician has generally relied on empirical solutions of specific problems. The two cases of rapidly varied flow (weir flow and hydraulic jump) occurring commonly in storm drainage will be discussed in this section.

Weir Flow

The common use of weirs in storm drainage analysis is for spillway outlets in detention ponds. The general form of the equation for horizontal crested weirs is:

$$Q = CLH^{3/2} \tag{6-6}$$

where:

Q	=	channel discharge, in cubic feet per second
C	=	weir coefficient
L	=	horizontal length, in feet
H	=	total energy head, in feet

Another common weir is the V-notch, whose equation is as follows:

$$Q = C \tan(\theta/2) H^{5/2} \tag{6-7}$$

where:

Q	=	channel discharge, in cubic feet per second
C	=	weir coefficient, usually 2.50
θ	=	angle of the notch at the apex, in degrees
H	=	total energy head, in feet

The weir coefficient is a function of various hydraulic properties and dimensional characteristics of a weir. Experiments have been conducted on various types of weir configurations and formulas have been developed to determine the "C" value. Available empirical formulas are numerous and the designer is urged to solicit hydraulic textbooks, such as Handbook of Hydraulics by Brater and King[2], and use engineering judgement. When designing or evaluating weir flow, the effects of submergence must be considered. A simple check on submergence can be made by comparing the tailwater to the headwater elevations.

Hydraulic Jump

In urban hydraulics, a hydraulic jump may occur at grade control structures (i.e., check drops), inside storm drains or concrete box culverts, or at the outlet of an emergency spillway for detention ponds. The evaluation of hydraulic jumps is important since there is a loss of energy and erosive forces associated with a jump. For hard-lined facilities such as pipes or concrete channels, the forces and the change in energy can affect the structural stability or the hydraulic capacity. For grass-lined channels, the erosive forces must be controlled to prevent serious damages. The control is usually obtained by check drops or grade control structures which confine the erosive forces to a protected area.

The analysis of the jump inside of storm drains is approximate due to the lack of data for circular, elliptical or arch sections. The jump can be approximately located by intersecting the energy grade line of the supercritical and subcritical flow reaches. The primary concerns are: 1) if the pipe can withstand the forces which may separate the joints or damage the pipe wall, and 2) if the jump will affect the hydraulic characteristics. The effect on pipe capacity can be determined by evaluating the energy grade line taking into account the energy lost by the jump. In general, for a Froude Number less than 2.0, the loss of energy is less than 10 percent.

For long box culverts with a concrete bottom, the concerns of the jump are the same as for storm drains. However, the jump can be adequately defined for box culverts/drains and for spillways using the jump characteristics of rectangular sections. A detailed evaluation of the hydraulic jump is beyond the scope of this Manual and the user is referred to other texts for discussion of this subject. The calculations are to be included with the required submittals.

6.5 DESIGN CONSIDERATIONS

Typical channel cross sections are triangular, trapezoidal and parabolic in shape. A triangular channel is a special type of trapezoidal section with a bottom width of zero. Due to the difficulty of maintenance, their application is generally not feasible. Trapezoidal channels of varying bottom widths and side slopes are the most commonly constructed channels. Parabolic channels are generally used only when a vegetated lining is required, although different sections may be selected. Formulas used in channel size design for typical cross section geometry's are presented in Table 6-1.

TABLE 6-1 Geometric Elements of Channel Sections

Section	Area A	Wetted Perimeter WP	Hydraulic Radius R	Top Width T
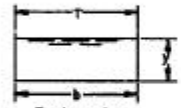 Rectangular	by	$b + 2y$	$\frac{by}{b + 2y}$	b
Trapezoidal	$(b + Zy)y$	$b + 2y\sqrt{1 + Z^2}$	$\frac{(b + Zy)y}{b + 2y\sqrt{1 + Z^2}}$	$b + 2Zy$
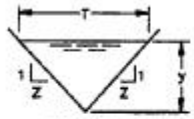 Triangular	zy^2	$2y+\sqrt{1 + Z^2}$	$\frac{Zy}{2\sqrt{1 + Z^2}}$	$2Zy$
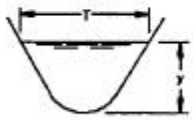 Parabolic	$\frac{2}{3}Ty$	$T + \frac{8y^2}{3T}$	$\frac{2T^2y}{3T^2 + 8y^2}$	$\frac{3A}{2y}$

Source: Chow, Ven Te, 1959; Open-Channel Hydraulics

Man-made open channels are commonly designed to have trapezoidal sections of adequate cross sections to incorporate ease of maintenance, uncertainties in runoff estimates, changes in channel roughness coefficients, channel obstructions and sediment accumulations. Figure 6-4 shows several typical cross sections used for design of grass-lined open channels in urban areas, including channels with alternative trickle channel designs. These channel configurations may be necessary where there are limited right-of-way constraints and where hard lined channels are required.

Determination of a representative Manning's "n" value is critical in the analysis of the hydraulic characteristics of an open channel. The "n" value for each channel reach should be based on the individual channel characteristics. Table 6-2 presents a method of determining the composite roughness coefficient for an unlined channel reach based on actual channel conditions. Typical minimum, normal and maximum roughness coefficients for various types of open channels are presented in Table 6-3.

Typical roughness coefficients for a straight channel without shrubbery or trees have been developed by the Soil Conservation Service. Table 6-4 presents a variable "n" value dependent on the depth of flow in the channel. It is required that the Manning's "n" in Tables 6-2 and 6-3 be used to describe a straight channel roughness for nonlinear channels. Experience and judgement should also be used in selecting the proper "n" value for a channel. When working with a detailed hydraulic model such as HEC-2, "n" values should be calibrated, whenever possible, to known water surface conditions. The designer should expect to use higher values than those listed. The higher values are often required to account for losses due to channel blockage, meander and many other factors not included in the tables.

TABLE 6-2 Composite Roughness Coefficients for Unlined Open Channels

$$n = (n_o + n_1 + n_2 + n_3 + n_4)\ m_5 \qquad (6\text{-}8)$$

Coefficients	Channel Conditions	Value
Material Type	Earth	0.020
n_o	Rock cut	0.025
	Fine Gravel	0.024
	Coarse Gravel	0.028
Degree of Irregularity	Smooth	0.000
n_1	Minor	0.005
	Moderate	0.010
	Severe	0.020
Variation of Channel	Gradual	0.000
Cross Section	Alternating Occasionally	0.005
n_2	Alternating Frequently	0.010 - 0.015
Relative Effect	Negligible	0.000
of Obstructions	Minor	0.010 - 0.015
n_3	Appreciable	0.020 - 0.030
	Severe	0.040 - 0.060
Vegetation	Low	0.005 - 0.010
n_4	Medium	0.010 - 0.025
	High	0.025 - 0.050
	Very High	0.050 - 0.100
Degree of Meandering	Minor	1.000
m_5	Appreciable	1.150
	Severe	1.3

Source: Chow, Ven Te, 1959; Open-Channel Hydraulics[6]

TABLE 6-3 Typical Roughness Coefficients for Open Channels

Type of Channel and Description			Minimum	Normal	Maximum
EXCAVATED OR DREDGED					
a.	Earth, straight and uniform:				
	1.	Clean, recently constructed	0.016	0.018	0.020
	2.	Clean, after weathering	0.018	0.022	0.025
	3.	Gravel, uniform section, clean	0.022	0.025	0.030
	4.	With short grass, few weeds	0.022	0.027	0.033
b.	Earth, winding and sluggish:				
	1.	No vegetation	0.023	0.025	0.030
	2.	Grass, some weeds	0.025	0.030	0.033
	3.	Dense weeds or aquatic plants in deep channels	0.030	0.035	0.040
	4.	Earth bottom and rubble sides	0.028	0.030	0.035
	5.	Stony bottom and weedy banks	0.025	0.035	0.040
	6.	Cobble bottom and clean sides	0.030	0.040	0.050
c.	Dragline-excavated or dredged:				
	1.	No vegetation	0.025	0.028	0.033
	2.	Light brush on banks	0.035	0.050	0.060
d.	Rock cuts:				
	1.	Smooth and uniform	0.025	0.035	0.040
	2.	Jagged and irregular	0.035	0.040	0.050
e.	Channels not maintained, weeds and brush uncut:				
	1.	Dense weeds, high as flow depth	0.050	0.080	0.120
	2.	Clean bottom, brush on sides	0.040	0.050	0.080
	3.	Same, highest stage of flow0.045	0.070	0.110	
	4.	Dense brush, high stage	0.080	0.100	0.140
NATURAL STREAMS					
Minor streams (top width at flood stage < 100 feet)					
a.	Streams on plain				
	1.	Clean, straight, full stage, no rifts or deep pools	0.025	0.030	0.033
	2.	Same as above, but more stones and weeds	0.030	0.035	0.040
	3.	Clean, winding, some pools and shoals	0.033	0.040	0.045
	4.	Same as above, but some weeds and stones	0.035	0.045	0.050

TABLE 6-3 Typical Roughness Coefficients for Open Channels (Cont'd)

Type of Channel and Description			Minimum	Normal	Maximum
NATURAL STREAMS (Cont'd)					
	5.	Same as above, lower stages, more ineffective slopes and sections	0.040	0.048	0.055
	6.	Same as 4, but more stones	0.045	0.050	0.060
	7.	Sluggish reaches, weedy, deep pools	0.050	0.070	0.080
	8.	Very weedy reaches, deep pools, or floodways with heavy stand of timber and underbrush	0.075	0.100	0.150
LINED OR BUILT-UP CHANNELS					
a.	Corrugated Metal		0.021	0.025	0.030
b.	Concrete:				
	1.	Trowel finish	0.011	0.013	0.015
	2.	Float finish	0.013	0.015	0.016
	3.	Finished, with gravel on bottom	0.015	0.017	0.020
	4.	Unfinished	0.014	0.017	0.020
	5.	Gunite, good section	0.016	0.019	0.023
	6.	Gunite, wavy section	0.018	0.022	0.025
	7.	On good excavated rock	0.017	0.020	
	8.	On irregular excavated rock	0.022	0.027	
c.	Concrete bottom, float finished with sides of:				
	1.	Dressed stone in mortar	0.015	0.017	0.020
	2.	Random stone in mortar	0.017	0.020	0.024
	3.	Cement rubble masonry, plastered	0.016	0.020	0.024
	4.	Cement rubble masonry	0.020	0.025	0.030
	5.	Dry rubble or riprap	0.020	0.030	0.035
d.	Gravel bottom with sides of:				
	1.	Formed concrete	0.017	0.020	0.025
	2.	Random stone in mortar	0.020	0.023	0.026
	3.	Dry rubble or riprap	0.023	0.033	0.036

TABLE 6-3 Typical Roughness Coefficients for Open Channels (Cont'd)

Type of Channel and Description			Minimum	Normal	Maximum
LINED OR BUILT-UP CHANNELS (Cont'd)					
e.	Asphalt:				
	1.	Smooth	0.013	0.013	
	2.	Rough	0.016	0.016	
f.	Rock-lined:				
	1.	Riprap	0.023	0.033	0.036
	2.	Grouted riprap	0.020	0.023	0.026
	3.	Gabions	0.025		0.033

Source: Chow, Ven Te, 1959; Open-Channel Hydraulics[6]

TABLE 6-4 Manning's Roughness Coefficients for Straight Channels Without Shrubbery or Trees

Grass Condition	Depth of Flow of 0.7 to 1.5 feet	Depth of Flow greater than 3.0 feet
Bermudagrass, Buffalograss, Kentucky Bluegrass:		
a. Mowed to 2 inches	0.035	0.030
b. Length 4-6 inches	0.040	0.030
Good stand, any grass:		
a. Length of 12 inches	0.070	0.035
b. Length of 24 inches	0.100	0.035
Fair stand, any grass:		
a. Length of 12 inches	0.060	0.035
b. Length of 24 inches	0.070	0.035

Where applicable, unlined open channels of a given soil type should have sufficient gradient to provide self-cleaning flow velocities but not be so great as to create excessive erosion. Maximum permissible design flow velocities for earth channels are presented in Table 6-5. Table 6-6 presents maximum permissible velocities for earth channels with varied grass linings and sloping configurations. Lined channels, drop structures, check dams, or concrete spillways may be required to control erosion that results from high channel flow velocities. Overall, the design of open channels, including stable, alluvial channel systems, is tied closely to the criteria for erosion and sediment control.

TABLE 6-5 Maximum Permissible Design Open Channel Flow Velocities in Earth*

Soil Types	Permissible Mean Channel Velocity (fps)
Fine Sand (noncolloidal)	2.0
Coarse Sand (noncolloidal)	4.0
Sandy Loam (noncolloidal)	2.5
Silt Loam (noncolloidal)	3.0
Ordinary Firm Loam	3.5
Silty Clay	3.5
Fine Gravel	5.0
Stiff Clay (very colloidal)	5.0
Graded, Loam to Cobbles (noncolloidal)	5.0
Graded, Silt to Cobbles (colloidal)	5.5
Alluvial Silts (noncolloidal)	3.5
Alluvial Silts (colloidal)	5.0
Coarse Gravel (noncolloidal)	6.0
Cobbles and Shingles	5.5
Hard Shales and Hard Pans	6.0
Soft Shales	3.5
Soft Sandstone	8.0
Sound rock (igneous or hard metamorphic)	20.0

* These velocities shall be used in conjunction with scour calculations and as approved by the City Engineer or Director of Public Works.

Source: Chow, Ven Te, 1959: Open Channel Hydraulics [6]

TABLE 6-6 Maximum Permissible Velocities for Earth Channels with Varied Grass Linings and Slopes

Channel Slope	Lining	Permissible Mean Channel Velocity*(fps)
0 - 2%	Small grains (temporary)	2.5
1 - 5%	Western Wheatgrass/Buffalograss	5.0
	Western Wheatgrass/Tall Fescue	5.0
	Western Wheatgrass	5.0
	Bermudagrass	6.0
	Buffalograss/Bluegrama	4.0
5 - 10%	Bermudagrass	6.0
	Western Wheatgrass	5.0

* For highly erodible soils, decrease permissible velocities by 25%.
* Grass lined channels are dependent upon assurances of continuous growth and maintenance of grass.

6.6 DESIGN STANDARDS

The design standards for open channels cannot be presented in a step-by-step fashion because of the wide range of options available to the designer. Certain planning and conceptual criteria are particularly useful in the preliminary design of a channel. These criteria, which have the greatest effect on the performance and cost of the channel, are discussed below. Design submittals shall be in a clear and concise format convenient for review and shall include, but not be limited to, 1) storm runoff computations and mapping, 2) hydraulic design computations, assumptions, references, sketches and drawings, 3) floodplain mapping, 4) and all other pertinent data.

6.6.1 Natural Channels

The design criteria and evaluation techniques for natural channels are:

A. The channel shall have adequate capacity for the design storm runoff and the channel and overbank areas shall have adequate capacity for major storm runoff.

B. Natural channel segments which have a Froude Number greater than 0.95 for any flow shall be protected from erosion.

C. The water surface profiles shall be defined so that the design storm and major storm floodplain can be mapped.

D. Filling of the flood fringe reduces valuable floodplain storage capacity and tends to increase downstream runoff peaks. Filling of the flood fringe is subject to the restriction of floodplain regulations.

E. Roughness factors "n", which are representative of unmaintained or "in need of maintenance" conditions, shall be used for the analysis of water surface profiles.

F. Roughness factors "n", which are representative of maintained channel conditions, shall be used to determine velocity limitations.

G. Erosion control structures, such as riprap, check drops or check dams, may be required to control flow velocities, including the initial storm runoff.

H. Plan and profile drawings of the design and major storm floodplain, including flooded limits, shall be prepared. Appropriate allowances for future bridges or culverts, which can raise the water surface profile and cause the floodplain to be extended, shall be included in the analysis.

With most natural waterways, grade control structures should be constructed at regular intervals to decrease the slope and control erosion. However, these channels should be left in as near natural condition as possible. For that reason, extensive modifications should not be undertaken unless they are found to be necessary to avoid excessive erosion with subsequent deposition downstream.

The usual rules of freeboard depth, curvature, and other guidelines which are applicable to artificial channels do not necessarily apply to natural channels. There are significant advantages which may occur if the designer incorporates into his/her planning the overtopping of the channel and localized flooding of adjacent areas which are laid out and developed for the purpose of being inundated during the major storm runoff. The freeboard criteria can be used to an advantage in gaging the adequacy of a natural channel for future changes in runoff.

6.6.2 Grass-Lined Channels

Key parameters in grass-lined channel design include velocity, slopes, roughness coefficients, depth, freeboard, curvature, cross section shape, and lining materials. Other factors such as water surface profile computation, erosion control, drop structures, and transitions also play an important role. A discussion of these parameters is presented below.

A. Flow Velocity and Capacity

The maximum normal depth velocity should not exceed 7.0 feet per second for grass-lined channels, except in sandy soil where the maximum velocity should not exceed 5.0 feet per second. The Froude Number (turbulence factor) shall be less than 0.8 for grass-lined channels. Grass-lined channels having a Froude Number greater than 0.8 shall not be permitted. The minimum velocity should be greater than 2.0 feet per second for self-cleansing.

B. Longitudinal Channel Slopes

Grass-lined channels normally will have slopes of 0.2 percent to 0.5 percent. Where the natural topography is steeper than desirable, drop structures should be utilized to maintain design velocities.

C. Freeboard for Major Drainageways

Except where localized overflow in certain areas is desirable for additional ponding benefits or other reasons, the freeboard should be:

$$H_{FB} = 1.0 + \frac{V^2}{2g} \tag{6-9}$$

where:

H_{FB} = freeboard height, in feet

V = average channel flow velocity, in feet per second

g = acceleration of gravity, 32.2 feet per second squared

The minimum freeboard should be 1.0 feet above the computed water surface elevation. Freeboard should not be obtained by the construction of levees.

An approximation of the superelevation of the water surface at a curve can be obtained from the following equation:

$$h = \frac{V^2 T}{g r_c} \tag{6-10}$$

where:

h = superelevation, in feet

V = average channel flow velocity, in feet per second

T = top width of channel, in feet

g = acceleration of gravity, 32.2 feet per second squared

r_c = centerline radius of curvature, in feet

The freeboard shall be measured above the superelevation water surface.

D. Curvature

The centerline curvature should have a radius twice the top width of the design flow, but not less than 100 feet.

E. Cross Sections

The channel shape may be almost any type suitable to the location and to the environmental conditions. Often, the shape can be chosen to suit open space and recreational needs. However, limitations within which the design must fall for the major storm design flow include:

1. Trickle Channel

The base flow should be carried in a trickle channel. The minimum capacity should be 1.0 percent to 3.0 percent of the 100-year flow, but not less than 1 cfs. Trickle channels shall be constructed of materials to minimize erosion, to facilitate maintenance and to aesthetically blend with the adjacent vegetation and soils.

2. Bottom Width

The minimum bottom width shall be consistent with the maximum depth and velocity criteria. The minimum width should be 4 feet to accommodate the trickle channel.

3. Maintenance Access

Maintenance ROW and access shall be dedicated and constructed as specified in Section 1.4.7.

4. Side Slopes

Side slopes should be 4H:1V or flatter. Steeper slopes may be used in existing developed areas subject to additional erosion protection and approval from the City Engineer or Director of Public Works.

5. Grass

The grass species chosen must be sturdy, drought resistant, easy to establish and able to spread. A thick root structure is necessary to control weed growth and erosion. The USDA Soil Conservation Service can provide assistance in selecting grass mixtures which have been successful, as well as recommending seeding and maintenance methods.

Newly constructed channels need a protective cover consisting of mulch and grass seeding immediately after completion. If possible, seed the disturbed areas with permanent grass seed mix. To provide quick ground cover the seed mix shall include a perennial ryegrass. The perennial ryegrass germinates quickly and will not compete with the sod-forming grasses later on. When immediate seeding of permanent grass is not practical, an annual crop may be planted with the perennial grass seeded later in the stubble or residue. Rye, oats, or ryegrass gives a fair temporary protection for waterways, though the crop should be clipped before it matures to seed.

6.6.3 Concrete-Lined Channels

The criteria for the design and construction of concrete lined channels is presented below:

A. Freeboard

Adequate channel freeboard above the designed water surface shall be provided and should be not less than that determined by Equation 6-11:

$$H_{FB} = 2.0 + 0.025V(d)^{1/3} \qquad (6\text{-}11)$$

where:

H_{FB} = freeboard height, in feet

V = average channel flow velocity, in feet per second

d = depth of flow, in feet

Freeboard shall be in addition to superelevation, standing waves, and/or other water surface disturbances. Concrete side slopes should be extended to provide freeboard. Freeboard should not be obtained by the construction of levees.

B. Superelevation

Superelevation of the water surface shall be determined at all horizontal curves and design of the channel section adjusted accordingly (See Equation 6-10).

C. Velocities

Flow velocities should not exceed 8 feet per second or result in a Froude Number greater than 0.9 for non-reinforced linings. Flow velocities should not exceed 18 feet per second for reinforced linings.

6.6.4 Rock-Lined Channels

Channel linings constructed from ordinary riprap, grouted riprap, or wire encased rock (gabions) to control channel erosion have been found to be cost effective. Situations for which riprap linings might be appropriate are: 1) where design flows, such as the 25-year flood are found to produce channel velocities in excess of allowable non-eroding values (5 feet per second for sandy soil conditions and 7 feet per second in erosion resistant soils); 2) where channel side slopes must be steeper than 3H:1V; 3) for low flow channels, and; 4) where rapid changes in channel geometry occur, such as at channel bends and transitions.

A. Ordinary and Grouted Riprap Channel Linings

Many factors govern the size of the rock necessary to resist the forces tending to move the riprap. For the riprap itself, this includes the size and weight of the individual rocks, the shape of the stones, the gradation of the particles, the blanket thickness, the type of bedding under the riprap, and the slope of the riprap layer. Hydraulic factors affecting riprap include the velocity, current direction, eddy action and waves.

Grouted riprap provides a relatively impervious channel lining which is less subject to vandalism than dumped riprap. Grouted riprap requires less routine maintenance by reducing silt and trash accumulation and is particularly useful for lining low flow channels and steep banks. The appearance of grouted riprap is enhanced by exposing the tops of individual stones and by cleaning the projecting rocks with a wet broom. Grouted riprap should meet all the requirements for ordinary riprap except that the smallest rock fraction (smaller than the 10% size) should be eliminated from the gradation. A reduction of riprap size by 3 inches - 6 inches is permitted for grouted rock.

1. Roughness Coefficient

The Manning's roughness coefficient for ordinary riprap and grouted riprap should be selected using Table 6-3. The "n" value is dependent on the predominant rock size.

2. Rock Size

The design should refer to the Texas Department of Transportation (TxDOT) Standard Specifications for Construction of Highways, Streets, and Bridges[21] for gradation requirements for riprap.

3. Toe Protection

Where only the channel sides are to be lined, additional riprap is needed to provide for long term stability of the lining. In this case, the riprap lining should extend at least three feet below the existing channel bed and the thickness of the blanket below the existing channel bed increased to at least three (3) times d_{50} to accommodate possible channel scour during floods. D_{50} is the rock size for which 50% of the sample is finer and can be determined by a sieve analysis from a material sample.

4. Channel Bends

The potential for erosion increases along the outside bank of a channel bend due to the acceleration of flow velocities on the outside part of the bend. Thus, it is often necessary to provide erosion protection in channels which otherwise would not need protection.

The minimum allowable radius for a riprap lined bend is 1.2 times the top width of the design flow water surface and in no case less than 50 feet. The riprap protection should be placed along the outside of the bank and should extend downstream from the bend a distance equal to the length of the bend.

Where the mean channel velocity exceeds the allowable non-eroding velocity so that riprap protection is required for straight channel sections, increase the rock size by three (3) to six (6) inches around bends having a radius less than the greater of the following: two times the top width, or 100 feet. The minimum allowable radius for a riprap lined bend in this case is also 1.2 times the top width of the design flow water surface.

5. Transitions

Scour potential is amplified by turbulent eddies in the vicinity of rapid changes in channel geometry such as transitions and bridges. Riprap protection for subcritical transitions (Froude Number 0.8 or less) is selected by increasing the channel velocity by twenty percent (20%). Since the channel velocity varies through a transition, the maximum velocity in the transition should be used in selecting riprap size after it has been increased by 20%. Protection should extend upstream from the transition entrance a minimum of five (5) feet or 2 times the width of the structure and extend downstream from the transition exit a minimum of ten (10) feet or 4 times the width of the structure.

B. Wire Enclosed Rock (Gabions)

Wire enclosed rock refers to rocks that are bound together in a wire basket so that they act as a single unit, usually referred to as a gabion. One of the major advantages of wire enclosed rock is that it provides an alternative in situations where available rock sizes are too small for ordinary riprap. Another advantage is the versatility that results from the regular geometric shapes of wire enclosed rock. The rectangular blocks and mats can be fashioned into almost any shape that can be formed with concrete. Plastic coated wire should be specified. The designer should be aware that if the flow contains coarse material, sand or gravel, it may abrade and break the wire basket, enabling the smaller rocks within the gabions to be transported downstream.

C. Bedding Requirements for Rock-Lined Channels

Long term stability of riprap and gabion erosion protection is strongly influenced by proper bedding conditions. A large percentage of all riprap failures are directly attributable to bedding failures. A properly designed bedding provides a buffer of intermediate sized material between the channel bed and the riprap to prevent piping of channel particles through the voids in the riprap. Two types of bedding are in common use: 1) a granular bedding filter and 2) filter fabric.

1. Granular Bedding

A bedding of mineral aggregate is adequate for most ordinary riprap, grouted riprap or wire encased riprap applications. The Texas Department of Transportation (TxDOT) Standard Specifications for Construction of Highways, Streets and Bridges[21] should be used for granular bedding.

2. Filter Fabric

Filter fabric has proven to be an adequate replacement for granular bedding in many instances. Filter fabric provides an adequate bedding of channel linings along uniform mild sloping channels where leaching forces are primarily perpendicular to the fabric.

Filter fabric is not a complete substitute for granular bedding. Filter fabric usually provides filtering action only perpendicular to the fabric and usually has only a single equivalent pore opening between the channel bed and the riprap. Filter fabric has a relatively smooth surface which provides less resistance to stone movement. As a result, filter fabric is restricted to slopes no steeper than 2.5H:1V. Tears in the fabric greatly reduce its effectiveness so that direct dumping of riprap on the filter fabric is usually not recommended and care must be exercised during construction.

At drop structures and sloped channel drops, where seepage forces may run parallel with the fabric and cause piping along the bottom surface of the fabric, special care is required in the use of filter fabric. Seepage parallel with the fabric might be reduced by folding the edge of the fabric vertically downward about two feet (similar to a cutoff wall) at approximately 12 foot intervals along the installation, particularly at the entrance and exit of the channel reach. Filter fabric should be lapped a minimum of 12 inches at roll edges with upstream fabric being placed on top of downstream fabric at the lap.

Fine silt and clay may clog the openings in the filter fabric, preventing free drainage and increasing failure potential due to uplift. For this reason, a granular filter is recommended for fine silt and clay channel beds.

D. Riprap Channel Linings

Design procedures for the design of ordinary and grouted riprap channel linings are presented in the Federal Highway Administration's Hydraulic Engineering Circulars Numbers 11 (HEC-11)[10] and 15 (HEC-15)[11]. For discharges less than 50 cfs, HEC-15 Design of Roadside Channels with Flexible Linings[11] should be used. HEC-11, Design of Riprap Revetments[10], provides the procedures for the design of riprap revetments to be used as channel bank protection and channel linings on larger streams and rivers (i.e. generally greater than 50 cfs).

6.6.5 Other Channel Linings

The criteria for the design of channels with linings other than grass, rock, or concrete will be dependent on the manufacturers recommendations for the specific product. The designer will be required to submit the technical data in support of the proposed material. Additional information or calculations may be requested by the City Engineer or Director of Public Works to verify assumptions or design criteria. The following minimum criteria will also apply:

A. Flow Velocity

The maximum normal depth velocity will be dependent on the construction material utilized. The Froude number shall be less than 0.8.

B. Freeboard

Same as for grass-lined channels, adjust for horizontal curvature.

C. Curvature

The center line curvature shall have a minimum radius twice the top width of the design flow but not less than 100 feet.

D. Roughness Coefficient

A Manning's "n" value range shall be established by the manufacturers data with the high value used to determine depth/capacity requirements and the low value used to determine Froude Number and velocity restrictions.

E. Cross Sections

Same as for grass-lined channels.

6.7 WATER SURFACE PROFILE ANALYSIS

For final design, water-surface profiles must be computed for all major channels. Computation of the water-surface profile should utilize standard backwater analysis, and should consider all losses due to changes in channel velocity, drops, curves, bridge openings, and other obstructions. Computations begin at a known point, and extend in an upstream direction for subcritical flow.

Backwater computation can be made using the standard step method presented in Open-Channel Hydraulics, by Chow[6]. Many computer programs are available for computation of backwater curves. The most general and widely used program is HEC-2, Water-Surface Profiles, developed by the US Army Corps of Engineers. This program will compute water-surface profiles for natural and manmade channels.

HEC-RAS (River Analysis System) was developed by the U.S. Army Corps of Engineers as an integrated system of software, designed for interactive use. The system is comprised of a graphical user interface (GUI), separate hydraulic analysis components, data storage and management capabilities, graphics, and reporting facilities. The system utilizes similar hydraulic principles as HEC-2 for one-dimensional, gradually-varied, steady flow water surface profile computations.

WSPRO, a program developed for the Federal Highway Administration can also be used to analyze one-dimensional gradually varied steady flow in open channels. WSPRO can analyze flow through bridges and culverts, embankment overflow, and multiple-opening stream crossings.

For prismatic channels, the backwater calculation can be computed manually using the Direct Step Method. For an irregular non-uniform channel, the Standard Step Method is used, which is a more tedious iterative process. The use of HEC-2, HEC-RAS, or WSPRO is recommended for non-uniform channel analysis.
The effects of superelevation and energy losses due to resistance in bends in open channels must be considered in backwater computations. In addition to superelevation on bends, flow separation in the bend creates a backwater effect that must also be considered. More detail on determining these effects may be found in Chow[6].

6.8 SUPERCRITICAL FLOW

Supercritical flow in an open channel creates certain hazards which the designer must take into consideration. From a practical standpoint, it is generally not possible to have any curvature in such a channel. Careful attention must be taken to insure against excessive oscillatory waves resulting from minor obstructions upstream which may extend down the entire length of the channel. Imperfections at joints of lined channels may rapidly cause a deterioration of the joints, in which case a complete failure of the channel can rapidly occur. In addition, high-velocity flow entering cracks or joints creates an uplift force by the conversion of velocity head to pressure head which can damage the channel lining. It is evident that, when designing a lined channel with supercritical flow, the designer must use utmost care and consider all relevant factors.

6.9 FLOOD PROOFING

The National Flood Insurance Program was created to reduce flood losses by promoting a wiser use of the flood plain. In return for making subsidized flood insurance available for existing structures, the participating community agrees to regulate new development in the flood plains. These regulations are adopted by a community in the form of a flood plain ordinance. The ordinance requires all new structures in the flood plain to be protected to a base flood elevation determined either by the Federal Emergency Management Agency (FEMA) or other sources. FEMA's elevations must be used if they are more restrictive. Improvements to existing structures in a flood plain can be elevated or flood proofed to reduce flood damages, at the option and cost of the property owner.

FEMA conducts a Flood Insurance Study (FIS) to determine the base flood elevations and, if appropriate, the floodway boundaries. The base flood is generally defined as the 100-year event, although reference should be made to the City's Flood Hazard Ordinance for Temple's interpretation of the base flood. The 100-year floodplain and corresponding elevations of the 100-year flood can be determined by reviewing the Flood Hazard Boundary Maps and Flood Insurance Rate Maps published by the Federal Insurance Administration. These maps are available for review in the office of the City Engineer or Director of Public Works.

Flood proofing is defined by Federal Insurance Administration as any combination of structural and nonstructural additions, changes or adjustments to structures which reduce or eliminate flood damage to real estate or improved real property and sanitary facilities, structures and their contents. The Federal Insurance Administration has published several references to provide detailed criteria and design procedures for flood proofing structures. It is beyond the scope of this Manual to describe flood proofing alternatives and their designs.

6.10 ENERGY DISSIPATORS

Energy dissipators include hydraulic structures such as stilling basins, channel drops, transitions, baffle chutes, riprap and many other specific drainage works. Their shape, size, and other features vary widely depending upon the function to be served.

It is not the intent of this Section to describe all types of hydraulic structures, rather typical hydraulic structures are presented. Additional information can be obtained from technical references, some of which are listed in the bibliography.

Energy dissipators are often necessary at the end of outfall sewers, culverts or channels. Stilling basins, a type of energy dissipator, are useful at locations where the flow changes from supercritical to subcritical. Stilling basins can reduce or limit potential erosion downstream from a high-velocity channel or conduit.

6.10.1 Impact-Type Stilling Basins

When the energy of flow must be dissipated, the impact-stilling basin is an effective structure for reducing the exit velocity to a tranquil state. A hydraulic jump occurs and energy is dissipated by the stilling basin. The Bureau of Reclamation has developed various types of impact-stilling basins. Figure 6-5 shows Type II, III and IV basins. A Type II basin is typically used for Froude numbers above 4.5 and is used for high dam and earth dam spillways and large canal structures. Basin III is developed for smaller structures having low or moderate (less than 60 fps) velocities and discharges per foot of width less than 200 cfs. A Type IV Basin is used for Froude Numbers between 2.5 and 4.5 and is used for stilling-basin design, outlet works and division dams.

Impact-type stilling basins are subject to local flow turbulences and large dynamic forces which must be considered in the structural design. The structure must be made sufficiently stable to resist sliding due to the impact load on the baffle wall. The entire structure must also resist the severe vibrations inherent in this type of device and the individual structural members must be sufficiently strong to withstand the large dynamic loads.

6.10.2 Plunge Pools

A plunge pool is formed when a free-falling overflow drops vertically into a pool and scours out the bottom of the pool. The scour will reach a depth relative to the height of fall, depth of tailwater and the concentration of flow. Since the depth of scour is influenced by the erodibility of the streambed material, the pool must be heavily protected with large riprap or reinforced concrete. A plunge pool may only be used in a channel with a continuous low flow because of the health and safety hazards which could be created by a stagnant pool.

6.10.3 Drop Structures

The function of drop structures is to convey water from a higher to a lower elevation and to dissipate excess energy resulting from its fall. In a channel steep enough to cause severe erosion in earth channels or disruptive flow in lined channels, the water can be conveyed through a drop structure designed to safely dissipate the excess energy. Different kinds of drop structures used are vertical, baffled apron, rectangular inclined, and pipe drops.

Vertical drops are often the most economical for drops of less than three (3) feet. They can consist of a simple weir above a vertical retaining wall and a splash-pool-type energy dissipator that are combined in a single structure. These structures can be constructed from steel sheet pile, riprap, gabion retaining walls and channel mats, soil cement or reinforced concrete.

Baffled apron drops may be used for nearly any decrease in water-surface elevation where the horizontal distance for a grade drop is relatively short. They are particularly adaptable to the situation where the downstream water-surface elevation may vary because of channel degradation or an uncontrolled water surface. A further discussion on baffled aprons may be found in the Bureau of Reclamation publication Hydraulic Design of Stilling Basins and Energy Dissipators[5] and the Federal Highway Administration publication Hydraulic Design of Energy Dissipators for Culverts and Channels[13].

Rectangular inclined (RI) drops (Figure 6-6) and pipe drops (Figure 6-7) are used where the decrease in elevation is in the range of 3 to 15 feet over a relatively short distance. They convey water as well as dissipate the excess energy upon reaching the lower elevation.

Pipe drops are easily designed, built and operated. The inlets can be readily adapted to either an earth or a lined waterway and the outlets can be easily adapted to an earth or a lined canal or to a waterway where there is no downstream water surface control. The inlets can be made to incorporate a control notch, a check or a weir. If there is a control or a check inlet, there should be side overflow walls for emergency flows. A pipe drop can easily be taken under another waterway or a roadway.

Pipe drops are economical, especially for small discharges. Pipe drops require very little maintenance, provided they are constructed of durable pipe having good rubber gasket joints and the bends are properly made. It is important to provide adequate gravel or riprap protection at outlets discharging into unlined waterways. The maximum fall for any one pipe drop is about 15 feet.

A sumped pipe drop should not be used if there is a strong possibility of the pipe becoming clogged with sediment. There is also the possibility of the drop becoming clogged with weeds or debris. To prevent this, the drop may have a weed screen on the inlet or the pipe may be sufficiently sized to discharge this material if it should get into the pipe drop.

Rectangular inclined drops are easily designed, built and operated. The inlets and outlets can be easily adapted to either an earth or a lined waterway. The inlets can be made to incorporate a control notch, a check or a weir. If there is a control or check inlet, side overflow walls for

emergency situations should be included. It is important to provide adequate gravel or rock protection of outlets discharging into unlined waterways. The maximum fall in water surface for any one RI drop is about 15 feet.

The rectangular inclined drop should have adequate percolation path and sufficient resistance to sliding. The standard RI drop structure in Figures 6-6 and 6-7 are designed to provide this stability. However, if unusual foundation conditions are encountered, the percolation and sliding resistance should be checked, and additional stability may be obtained by increasing the length.

6.10.4 Chute Structures

Chute structures are commonly used where the drop in elevation is greater than 15 feet. A chute structure usually consists of an inlet, a chute section, an energy dissipator, and an outlet transition. Figure 6-8 shows the relationship of the different parts of the structure. Chutes are similar to drops except that they carry the water over longer distances, over flatter slopes, and through greater changes in grade. The inlet portion of the structure transitions the flow from the channel upstream of the structure to the chute structure. The chute section generally follows the original ground surface and connects to an energy dissipator at the lower end. Stilling pools or baffled outlets are used as energy dissipators on chute structures. An outlet transition is used when it is necessary to transition the flow between the energy dissipator and the downstream channel.

In a pipe chute, Figure 6-9, the open section is replaced by a pipe. Pipe chutes may be designed to provide a crossing.

The decision as to whether to use a chute structure or a series of smaller drops should be based upon a hydraulic and economic study of the alternatives. Drops should not be so closely spaced as to possibly preclude uniform flow between outlet and inlet ends of consecutive structures, particularly where checks or control notches are not used at the inlets. Sufficient tailwater depths may not exist between the structures to produce hydraulic jumps in the pools, and thus "shooting flow" may develop through the series of drops and possibly damage the channel. Also, with drops too closely spaced on a steep slope, problems of excavation and backfill may make construction undesirable or prohibitive. About 200 feet of channel should be the minimum distance between the inlet and outlet ends of consecutive drop structures. The economic study should compare costs of a series of drops and a single chute structure considering advantages and disadvantages pertinent to the specific conditions. Since the maintenance costs for a series of drops is usually considerably more than for a single chute structure performing the same hydraulic function, it is sometimes economically feasible to spend considerably more in initial costs for a chute structure than for a series of drops. More complete discussions on chute structures are presented in Bureau of Reclamation, Design of Small Canal Structures[3].

6.11 FLOW TRANSITIONS

A flow transition structure is a change of channel cross section designed to allow for a minimum amount of flow disturbance. Several types of transitions are shown on Figure 6-10. Of these, the abrupt (headwall) and the straight line (wingwall) are the most common.

Special inlet transitions are useful when the conservation of flow energy is essential because of allowable headwater considerations. Section 7 includes a discussion on culvert design with improved inlets.

Outlet transitions (expansions) must be considered in the design of all culverts, energy dissipators and channel protection. The standard wingwall-apron combinations and expansions downstream of dissipator basins are most common.

6.12 RIPRAP

Placement of riprap is used for preventing or limiting channel bed and bank erosion damage caused by excessive channel flow or surges from energy dissipators. Placement of riprap on the channel bottom and banks downstream of an energy dissipator structure is required for alleviating possible undermining of the structure due to scour.

Experience has shown that a primary reason for riprap failure is placement of undersized individual stones in the maximum size range. Failure has also occurred because of improper engineering design for gradation of riprap, seepage control and/or bedding filter requirements.

Design of riprap should take into account the following parameters: 1) stone durability; 2) stone density; 3) stone size; 4) stone shape; 5) stone gradation; 6) velocity of flow against the stone; 7) filter bed requirements; 8) channel side slopes; and 9) Froude Number.

A well-graded riprap layer contains about 40 percent of the rock pieces smaller than the required size as stable, or more stable, than a single stone of the required size. Most of the mixture should consist of stones having length, width, and thickness dimensions as nearly equal as practical and should not be flat slabs. The riprap layer should be a minimum of 1-1/2 times or more, as thick as the dimension of the large stones (curve size), and should be placed over a gravel or reverse filter layer.

6.13 SCOUR

Basically, scour is the net result of an imbalance between the capacity of the flow to transport sediment out of an area and the rate of supply of sediment to that area. At a bridge crossing, for instance, the area of interest is the immediate vicinity of the bridge foundation, the piers and abutments. The imbalance of this capacity and supply can arise from a variety of causes which can be generally categorized as 1) those characteristics of the stream itself, and 2) those due to the modification of the flow by the bridge piers and abutments.

Because of the overall complexity of the hydrodynamic forces existing in a natural stream channel, the detailed flow pattern in an unobstructed stream cannot be predicted over time with great accuracy. Reasonable estimates can be made based on observations along reaches of similar streams, and in some cases, actual records and measurements for the particular reach of the stream under investigation can be performed. The designer is encouraged to use the method and procedures in the Federal Highway Administration's publication HEC-18, Evaluating Scour of Bridges[12] to evaluate scour.

Scour, which occurs because of modification of the flow patterns by a bridge crossing, can be further divided into two distinct types of scour depending upon whether or not sediment is supplied to the scour hole. Equilibrium is attained when a scour hole is enlarged to a size where the capacity to remove material from the scour hole is balanced by the rate at which sediment is supplied to the scour hole. During floods, a scour hole located in the main channel will be supplied with sediment at a rate characteristic of the stream. Ignoring the complexities of material stratification that may exist below the stream bed, the material supplied will be essentially the same as the material removed.

If no sediment is supplied to the scour hole, equilibrium is not attained until the configuration of the bed is such that the scouring capacity of the flow is zero. This condition is most likely to occur in overbank areas where vegetation reduces flow velocities, causing the coarser material to drop out of suspension, resulting in a greater degree of scour in overbank areas than would otherwise occur in the main channel.

6.14 BIBLIOGRAPHY

1. Albertson, Maurice L., Barton, James R., and Simons, Daryl B., Fluid Mechanics for Engineers, Prentice-Hall, Inc., Englewood Cliffs, New Jersey, 1960.

2. Brater, Ernest F and Horace Williams King, Handbook of Hydraulics, Sixth Edition, McGraw-Hill Book Company, 1976.

3. Bureau of Reclamation, US Department of the Interior, Design of Small Canal Structures, US Government Printing Office, Denver, Colorado.

4. Bureau of Reclamation, US Department of the Interior, Design of Small Dams, US Government Printing Office, Denver, Colorado, 1987.

5. Bureau of Reclamation, US Department of the Interior, Hydraulic Design of Stilling Basins and Energy Dissipators, Engineering Monograph No. 25, US Government Printing Office, Denver, Colorado 1984.

6. Chow, Ven Te, Open-Channel Hydraulics, McGraw-Hill Book Company, Inc., New York, NY, 1959.

7. Federal Aviation Administration, Airport Drainage, Government Printing Office, Washington, D.C., 1966.

8. Federal Emergency Management Agency, Floodproofing Non-Residential Structures, FEMA 102, US Government Printing Office, Washington, D.C., May 1986.

9. Federal Highway Administration, US Department of Transportation, Design Charts for Open-Channel Flow, Hydraulic Design Series No.3, August 1961.

10. Federal Highway Administration, US Department of Transportation, Design of Riprap Revetment, Hydraulic Engineering Circular No. 11, US Government Printing Office, Washington, DC, March 1989.

11. Federal Highway Administration, US Department of Transportation, Design of Roadside Channels with Flexible Linings, Hydraulic Engineering Circular No. 15, US Government Printing Office, Washington, DC, April 1988.

12. Federal Highway Administration, US Department of Transportation Evaluating Scour at Bridges, Hydraulic Engineering Circular No. 18, National Technical Information Service, Springfield, Virginia, February 1991.

13. Federal Highway Administration, US Department of Transportation, Hydraulic Design of Energy Dissipators for Culverts and Channels, Hydraulic Engineering Circular No. 14, US Government Printing Office, Washington, D.C., 1983.

14. Federal Highway Administration, US Department of Transportation, Users Manual for WSPRO, A Computer Model for Water Surface Profile Computations, HY 7, US Government Printing Office, Washington, D.C., March 1990.

15. Federal Insurance Administration, Elevated Residential Structures, Reducing Flood Damage Through Building Design: A Guide Manual, US Government Printing Office, Washington, D.C., 1977.

16. NAHB Research Foundation, Inc., Manual for the Construction of Residential Basements in Non-Coastal Flood Environs, Department of Housing and Urban Development Federal Insurance Administration, US Government Printing Office, Washington, D.C., 1977.

17. National Flood Proofing Committee, US Army Corps of Engineers, Flood Proofing Tests, Test of Materials and Systems for Flood Proofing Structures, US Government Printing Office, Washington, D.C., August 1988.

18. Office of the Chief of Engineers, US Army, Flood-Proofing Regulations, US Government Printing Office, Washington, D.C., June 1972.

19. Office of Surface Mining, US Department of the Interior, Surface Mining Water Diversion Design Manual, US Government Printing Office, Washington, D.C., September, 1982.

20. Shaeffer, John R. Introduction to Flood Proofing: An Outline of Principles and Methods, Center for Urban Studies, The University of Chicago, Chicago, IL, April 1967.

21. Texas State Department of Highway and Public Transportation, 1982 Standard Specifications for Construction of Highways, Streets and Bridges, September 1, 1982.

22. U.S. Army Corps of Engineers, HEC-2 Water Surface Profiles, User's Manual, Hydrologic Engineering Center, Davis, CA, September, 1990.

23. U.S. Army Corps of Engineers, HEC-RAS River Analysis System, Hydraulic Reference Manual, Version 1.0, Hydrologic Engineering Center, Davis, CA, July, 1995.

24. Wright-McLaughlin Engineers, Urban Storm Drainage Criteria Manual, Denver Regional Council of Governments, Denver, Colorado, 1969.

SECTION 7
CULVERTS AND BRIDGES

Page

7.1 INTRODUCTION 7-5

7.2 CULVERT AND BRIDGE DESIGN CRITERIA..... 7-5
7.2.1 Design Frequency..... 7-5
7.2.2 Culvert Discharge Velocities..... 7-5

7.2.3 Culvert Material Types 7-5
7.2.4 Bridge Openings 7-5

7.3 CULVERT TYPES 7-6
7.3.1 Inlet Control 7-6
7.3.2 Outlet Control 7-9

7.4 CULVERT END TREATMENTS 7-13
7.4.1 Entrance Conditions 7-13
7.4.2 Headwall/Endwall Treatment 7-13
7.4.3 Improved Inlets 7-14

7.5 CULVERT DESIGN WITH STANDARD INLETS 7-14
7.5.1 Culvert Sizing 7-15
Inlet Control 7-16
Outlet Control 7-18
Evaluation of Results 7-20
7.5.2 Design Procedure 7-21
Design Computation Forms 7-21
Invert Elevations 7-22
Culvert Diameter 7-22
Limited Headwater 7-22
Culvert Outlet 7-22
Minimum Slope 7-22

7.6 OTHER INLET TYPES 7-26
7.6.1 Beveled Inlets 7-26
7.6.2 Performance Curves 7-28
Outlet Control Performance Curves 7-28
Inlet Control Performance Curves 7-29
Analyze the Effect of Additional FALL 7-30
Tapered Inlet Face Control Performance Curves 7-31
7.6.3 Tapered Inlet Design 7-32
7.6.4 Dimensional Limitations 7-35
Side-Tapered Inlets 7-35
Slope-Tapered Inlets 7-36

7.7 BRIDGE HYDRAULIC DESIGN 7-43
7.7.1 Design Approach 7-43
7.7.2 Bridge Opening Freeboard 7-43

7.8 BRIDGE HYDRAULIC ANALYSIS 7-43
7.8.1 HEC-2 Model 7-44
7.8.2 HEC-RAS Model 7-45
7.8.3 WSPRO Model 7-45

7.9 LIST OF SYMBOLS 7-46

7.10 BIBLIOGRAPHY 7-49

LIST OF TABLES

Table Page

7-1 Flow Categories 7-6
7-2 Entrance Loss Coefficients 7-8
7-3 Manning's Roughness Coefficients "n" for Culverts 7-15
7-4 Cross Sectional Area Coefficient, Ca, of a Circular Conduit Flowing Part Full 7-21

LIST OF FIGURES

Figure Page

7-1 Types of Inlet Control 7-51
7-2 Types of Outlet Control 7-52
7-3 Culvert Capacity Standard Circular RCP, Square Entrance 18" to 66" 7-53
7-4 Culvert Capacity Standard Circular RCP, Square Edged Entrance 60" to 180" 7-54
7-5 Culvert Capacity Circular RCP, Groove-Edged Entrance 18" to 66" 7-55
7-6 Culvert Capacity Circular RCP, Groove-Edged 60" to 180" 7-56
7-7 Headwater Depth for Box Culverts with Inlet Control 7-57
7-8 Headwater Depth for Concrete Pipe Culverts with Inlet Control 7-58

LIST OF FIGURES (CONTINUED)

Figure		Page
7-9	Head for Outlet Control Concrete Box Culverts Flowing Full n = 0.012	7-59
7-10	Head for Outlet Control Concrete Pipe Culverts Flowing Full n = 0.012	7-60
7-11	Critical Depth, d_c Circular Pipe	7-61
7-12	Critical Depth, d_c Rectangular Section	7-62
7-13	Culvert Design Form	7-63
7-14	Headwater Depth for Circular Pipe Culverts with Beveled Ring with Inlet Control	7-64
7-15	Headwater Depth for Inlet Control Rectangular Box Culverts 90° Headwall Chamfered or Beveled Inlet Edges	7-65
7-16	Headwater Depth for Inlet Control Single Barrel Box Culvert Skewed Headwalls Chamfered or Beveled Inlet Edges	7-66
7-17	Headwater Depth for Inlet Control Rectangular Box Culvert Flared Wingwalls 18° to 33.7° & 45° with Beveled Edge at Top of Inlet	7-67
7-18	Outlet Control Performance Curves	7-68
7-19	Box Culvert Outlet Control Performance Curves	7-69
7-20	Inlet Control Performance Curves for Various Inlet Configurations	7-70
7-21	Optimization of Performance in Inlet Control	7-71
7-22	Possible Face Design Selection Tapered Inlet	7-72
7-23	Tapered Inlet Design Options for 8 ft x 6 ft Reinforced Box Culvert	7-73
7-24	Tapered Inlet Design Form	7-74
7-25	Mitered Inlet Design Form	7-75
7-26	Headwater Depth for Face Control Box Culverts with Side-Tapered Inlets	7-76
7-27	Headwater Depth for Face Control Box Culvert with Slope-Tapered Inlets	7-77
7-28	Headwater Depth for Face Control Pipe Culverts with Side-Tapered Inlets (Non-Rectangular Section Only)	7-78
7-29	Headwater Depth for Throat Control Box Culverts with Tapered Inlets	7-79
7-30	Headwater Depth for Throat Control Pipe Culverts with Side-Tapered Inlets (Circular Section Only)	7-80

7.1 INTRODUCTION

The function of a drainage culvert or bridge is to pass the design storm flow under a roadway, railroad, or other feature without causing excessive backwater and without creating excessive downstream velocities.

7.2 CULVERT AND BRIDGE DESIGN CRITERIA

7.2.1 Design Frequency

Culverts and bridges shall be designed such that there is no overtopping of the associated roadway for the 25-year storm event. For the major storm event, overtopping of residential streets shall not exceed 12 inches and overtopping of residential collector, neighborhood collectors, industrial, and arterial streets shall not exceed 6 inches. In addition, for the 100-year storm event, the minimum finished floor elevation of residential dwellings or public, commercial and industrial buildings shall not be less than one (1) foot above the inundation level, unless the building is flood proofed.

7.2.2 Culvert Discharge Velocities

The velocity of discharge from culverts should have consideration given to the effect of high velocities, eddies or other turbulence on the natural channel, downstream property and roadway embankment. The maximum permissible velocity released from culverts into downstream channels shall be based on criteria discussed in Section 6.

It is recommended that a minimum velocity of 3.0 feet per second for the design flow be maintained in all drainage structures to prevent siltation. Where doubt exists concerning silt or scour, protection commensurate with the value of the structure and surrounding property shall be installed to insure that damage to or failure of the structure will not occur.

7.2.3 Culvert Material Types

Material for culverts shall be concrete. Structural plate products may also be acceptable for special situations if approved by the City Engineer or Director of Public Works.

7.2.4 Bridge Openings

Bridge openings should be designed to have as little effect on the flow characteristics as is possible, consistent with good bridge design and economics. However, in regard to supercritical flow with a lined channel, the bridge should not affect the flow at all. That is, there should be no projections into the design water prism.

7.3 CULVERT TYPES

Culverts shall be selected based on hydraulic principles, economy of size and shape, and with a resulting headwater depth which will not cause damage to adjacent property. It is essential to the proper design of a culvert that the conditions under which the culvert will operate are known. There are two major types of culvert flow; inlet and outlet control. For each type of control, different factors and equations are used to compute the hydraulic capacity of a culvert.

A culvert barrel may flow full or partly full. Full flow throughout the length of pipe is rare, and generally at least part of the barrel flows partly full. Water is flowing under pressure in a full flow condition and the capacity of the culvert is affected by the upstream and downstream conditions and the hydraulic characteristics of the culvert. Partly full or free surface flow can be categorized as subcritical, critical, or supercritical.

A dimensionless parameter known as the Froude Number (Fr) is calculated to categorize the flow. The Froude Number is discussed in Section 6. The different flow regimes are summarized in Table 7-1.

TABLE 7-1 Flow Categories

Flow Type	Depth	Velocity	Froude Number
Subcritical	$y > y_c$	$V < V_c$	$Fr < 1$
Critical	$y = y_c$	$V = V_c$	$Fr = 1$
Supercritical	$y < y_c$	$V > V_c$	$Fr > 1$

7.3.1 Inlet Control

Under inlet control, only the headwater and the inlet configuration affect the hydraulic performance. The headwater depth is measured from the invert of the culvert entrance to the water surface at the culvert entrance. This water surface elevation at the culvert entrance supplies the energy necessary to force flow through a culvert. The inlet face area is the same as the barrel area for nonimproved inlets. The inlet edge configuration is an important factor in the hydraulic efficiency of culverts. Types of configurations include projected, mitered, square edges in a headwall, and beveled edge. Figure 7-1 shows several types of inlet control.

In a condition where neither the inlet nor the outlet end of the culvert are submerged, the flow passes through critical depth just downstream of the culvert entrance and the flow in the barrel is supercritical. The barrel flows partly full over its length, and the flow approaches normal depth at the outlet end.

If critical flow occurs near the inlet, the culvert is operating under inlet control. The maximum discharge through a culvert flowing part full occurs when flow is at critical depth for a given energy head. To assure that flow passes through critical depth near the inlet, the culvert must be laid on a slope equal to or greater than critical slope for the design discharge. Placing culverts which are to

flow part full on slopes greater than critical slope will increase the outlet velocities but will not increase the discharge. The discharge is limited by the section near the inlet at which critical flow occurs.

The capacity of a culvert flowing part full with control at the inlet is governed by the following equation when the approach velocity is considered zero (Figure 7-1A)

$$HW = d_c + \frac{V_2^2}{2g} + h_e \qquad (7\text{-}1)$$

where:

HW	=	headwater depth above the invert of the upstream end of the culvert in feet. Headwater depth must be equal to or less than 1.2D
d_c	=	critical depth of flow, in feet
V_2	=	critical velocity at entrance of culvert, in feet per second
g	=	acceleration of gravity, 32.2 feet per second squared
h_e	=	entrance head loss, in feet
	=	$k_e\left[\frac{V_2^2}{2g}\right]$
k_e	=	entrance loss coefficient (Table 7-2)

The submergence of the outlet end of the culvert does not assure outlet control as shown in Figure 7-1B. In this case, the flow just downstream of the inlet is supercritical and a hydraulic jump forms in the culvert barrel.

Figure 7-1C is a more typical design situation. The inlet end is submerged and the outlet end flows freely, the flow is supercritical and the barrel flows partly full over its length. Critical depth is located just downstream of the culvert entrance, and the flow is approaching normal depth at the downstream end of the culvert.

Figure 7-1D illustrates the fact that submergence of both the inlet and the outlet ends of the culvert does not assure full flow. In this case, a hydraulic jump will form in the barrel. The median inlet is required to ventilate the culvert barrel. If the barrel were not ventilated, sub-atmospheric pressures could develop which might create an unstable condition during which the barrel would alternate between full flow and partly full flow.

TABLE 7-2 Entrance Loss Coefficients

Type of Structure and Design of Entrance	Coefficient k_e
Pipe, Concrete:	
Projecting from fill, socket end (groove end)	0.2
Projecting from fill, square-cut end	0.5
Headwall or headwall and wingwalls:	
Socket end of pipe (groove end)	0.2
Square-edged	0.5
Rounded (radius = 1/12D)	0.2
Mitered to conform to fill slope	0.7
* End section conforming to fill slope	0.5
Beveled edges, 33.7° or 45° bevels	0.2
Side-or slope-tapered inlet	0.2
Box, Reinforced Concrete:	
Headwall parallel to embankment (no wingwalls)	
Square-edged on 3 edges	0.5
Rounded on 3 edges to radius of 1/12 barrel dimension, or beveled edges on 3 sides	0.2
Wingwalls at 30° to 75° to barrel	
Square-edged at crown	0.4
Crown edge rounded to radius of 1/12 barrel dimension, or beveled top edge	0.2
Wingwall at 10° to 25° to barrel	
Square-edged at crown	0.5
Wingwalls parallel (extension of sides)	
Square-edged at crown	0.7
Side- or slope-tapered inlet	0.2

*Note: "End sections conforming to fill slope" are the sections commonly available from manufacturers. From limited hydraulic tests, they are equivalent in operation to a headwall in both inlet and outlet control. Some end sections incorporating a closed taper in their design have superior hydraulic performance.

Source: Federal Highway Administration, Hydraulic Design Series No. 5, Hydraulic Design of Highway Culverts.

7.3.2 Outlet Control

All the factors affecting the hydraulic performance of a culvert in inlet control also influence culverts in outlet control. In addition, the barrel characteristics (roughness, area, shape, length and slope) and the tailwater elevation affect culvert performance in outlet control.

The barrel roughness is a function of the culvert material and is represented by Manning's "n" coefficient. The barrel length is the total length extending from the entrance to the exit of the culvert. The barrel slope is the actual slope of the culvert and is often equivalent to the slope of the stream. The tailwater elevation is based upon the downstream water surface elevation measured from the outlet invert. Backwater calculations or normal depth approximations, when appropriate, are two methods used to determine the tailwater elevation. Figure 7-2 depicts several examples of outlet control.

Figure 7-2A represents the classic full flow condition, with both inlet and outlet submerged. The barrel is in pressure flow throughout its length. This condition is often assumed in calculations, but seldom actually exists.

In Figure 7-2B, the outlet is submerged with the inlet unsubmerged. For this case, the headwater is shallow so that the inlet crown is exposed as the flow contracts into the culvert.

Most culverts flow with free outlet, but, depending on topography, a tailwater pool of a depth sufficient to submerge the outlet may form at some installations. For an outlet to be submerged, the depth at the outlet must be equal to or greater than the diameter of pipe or height of box. The capacity of a culvert flowing full with a submerged outlet is governed by the following equation when the approach velocity is considered zero. Outlet velocity is based on full-pipe flow at the outlet.

$$HW = H + TW - S_o L \qquad (7\text{-}2)$$

where:

HW	=	headwater depth, in feet, above the invert of the upstream end of the culvert. Headwater depth must be greater than 1.2D for entrance to be submerged.
H	=	head for culvert flowing full, in feet
TW	=	tailwater depth, in feet
S_o	=	slope of culvert, in feet per foot
L	=	length of culvert, in feet

Figure 7-2-C shows the entrance submerged to such a degree that the culvert flows full throughout its entire length while the exit is unsubmerged. This is a rare condition. It requires an extremely high headwater to maintain full barrel flow with no tailwater. The outlet velocities are usually high under this condition.

Figure 7-2-D is more typical. The culvert entrance is submerged by the headwater and the outlet end flows freely with a low tailwater. For this condition, the barrel flows partly full over at least part of its length (subcritical flow) and the flow passes through critical depth just upstream of the outlet.

The capacity of a culvert flowing full over at least part of its length with a submerged entrance (HW $\geq$ 1.2 D) is governed by the following equation when the approach velocity is considered zero. Outlet velocity is based on critical depth if tailwater depth is less than critical depth (TW < d_c). If tailwater depth is greater than critical depth (TW > d_c), outlet velocity is based on tailwater depth.

$$HW = H + P - S_o L \tag{7-3}$$

where:

HW	=	headwater depth, in feet, above the invert of the upstream end of the culvert. Headwater depth must be greater than 1.2D for entrance to be submerged.
H	=	head for culverts flowing full, in feet
P	=	pressure line height, in feet
	=	$(d_c + D)/2$
d_c	=	critical depth, in feet
D	=	diameter or height of structure, in feet
S_o	=	slope of culvert, in feet per foot
L	=	length of culvert, in feet

In the condition where neither the inlet nor the outlet end of the culvert are submerged, the barrel flows partly full over its entire length, and the flow profile can be subcritical or supercritical. The tailwater depth can be above or below critical flow.

If the headwater pool elevation does not submerge the culvert inlet (HW < 1.2D), the slope at design discharge is subcritical ($S_o < S_c$), the tailwater depth is above critical depth (TW$\geq$ d_c), and the control occurs at the outlet. The capacity of the culvert is governed by the following equation when the approach velocity is considered zero.

$$HW = TW + \frac{V_{TW}^2}{2g} + h_e + h_f - S_o L \tag{7-4}$$

where:

HW	=	headwater depth above the invert of the upstream end of the culvert in feet. Headwater depth must be equal to or less than 1.2D
TW	=	tailwater depth above the invert of the downstream end of the culvert, in feet
V_{TW}	=	culvert discharge velocity, at tailwater depth, in feet per second
h_e	=	entrance head loss, in feet
	=	$k_e\left[\frac{V_{TW}^2}{2g}\right]$
k_e	=	entrance loss coefficient (Table 7-2)
g	=	acceleration of gravity, 32.2 feet per second squared
h_f	=	friction head loss, in feet
	=	$\frac{29n^2L}{R^{1.33}}\left[\frac{V^2}{2g}\right]$
n	=	Manning's roughness coefficient
L	=	length of culvert barrel, in feet
V	=	average pipe velocity, Q/A ,in feet per second
Q	=	discharge, in cubic feet per second
A	=	cross sectional area of flow, in square feet
R	=	hydraulic radius, A/WP, in feet
WP	=	wetted perimeter, in feet
S_o	=	slope of culvert, in feet per foot

The capacity of a culvert flowing part full with outlet control and tailwater depth below critical depth (TW = d_c) is governed by the following equation when the approach velocity is considered zero. The entrance is unsubmerged (HW < 1.2D), and the design discharge is subcritical ($S_o < S_c$).

$$HW = d_c + \frac{V_c^2}{2g} + h_e + h_f - S_o L \qquad (7\text{-}5)$$

where:

HW	=	headwater depth above the invert of the upstream end of the culvert, in feet. Headwater must be equal to or less than 1.2D, or entrance is submerged.
d_c	=	critical depth, in feet
V_c	=	critical velocity occurring at critical depth, in feet per second
h_e	=	entrance head loss, in feet
	=	$k_e\left[\frac{V_c^2}{2g}\right]$
k_e	=	entrance loss coefficient (Table 7-2)
g	=	acceleration of gravity, 32.2 feet per second squared
h_f	=	friction head loss, in feet
	=	$\frac{29n^2L}{R^{1.33}}\left[\frac{V^2}{2g}\right]$
V	=	average pipe velocity, Q/A, in feet per second
Q	=	discharge, in cubic feet per second
A	=	cross sectional area of flow, in square feet
n	=	Manning's roughness coefficient
L	=	length of culvert barrel, in feet
R	=	hydraulic radius, A/WP, in feet
WP	=	wetted perimeter, in feet
S_o	=	slope of culvert, in feet per foot

7.4 CULVERT END TREATMENTS

The normal functions of properly designed headwalls and endwalls for culverts are to provide gradual flow transition, to anchor the culvert preventing movement, to control erosion and scour resulting from excessive flow velocities and turbulence, and to prevent adjacent soil from sloughing into the waterway opening.

All headwalls shall be constructed of reinforced concrete and may be either straight parallel headwalls, flared headwalls, or warped headwalls with or without aprons, as may be required by local site conditions.

7.4.1 Entrance Conditions

It is important to recognize that the operating characteristics of a culvert may be completely changed by the shape or condition at the inlet or entrance. Design of culverts must involve consideration of energy losses that may occur at the entrance. The entrance head losses may be determined by the following equation.

$$h_e = k_e \left[\frac{V^2}{2g} \right] \tag{7-6}$$

where:

h_e	=	entrance head loss, in feet
k_e	=	entrance loss coefficient (Table 7-2)
V	=	velocity of flow in culvert, in feet per second
g	=	acceleration of gravity, 32.2 feet per second squared

7.4.2 Headwall/Endwall Treatment

In general, the following guidelines should be used in the selection of the type of headwall or endwalls:

Parallel Headwall and Endwall

A. Approach velocities are low (below 6 feet per second).

B. Backwater pools may be permitted.

C. Approach channel is undefined.

D. Sufficient right-of-way or easement is available.

E. Downstream channel protection is not required.

Flared Headwall and Endwall

A. Channel is well defined.

B. Approach velocities are between 6 and 10 feet per second.

C. Medium amounts of debris exist.

Warped (twisted) Headwall and Endwall

A. Channel is well defined and concrete lined.

B. Approach velocities are between 8 and 20 feet per second.

C. Medium amounts of debris exist.

Warped headwalls are effective with drop-down aprons to accelerate flow through the culvert, and they are effective endwalls for transitional flow from closed conduit flow to open-channel flow. This type of headwall should be used only where the drainage structure is large and right-of-way or easement is limited.

7.4.3 Improved Inlets

Several types of improved inlets have been developed. The use of these inlets may provide substantial savings by a reduction in the barrel size of the proposed structure. The use of these inlets is optional and should be based on an economic analysis by the designer. For box culverts, reinforced concrete structures, and structures using headwalls, the use of beveled inlets or tapered inlets is strongly recommended. For more information, the designer is referred to Hydraulic Design of Highway Culverts[4], Hydraulic Design Series No. 5 (HDS-5), by the Federal Highway Administration (FHWA).

7.5 CULVERT DESIGN WITH STANDARD INLETS

The information and publications necessary to design culverts according to the procedure presented in this Section can be found in Hydraulic Design of Highway Culverts[4], Hydraulic Design Series No. 5. Several charts and nomographs, from this publication, covering the more common requirements, are located at the end of this section. For special cases and larger structure sizes, the FHWA publication should be used. In addition, an IBM PC compatible computer program (HY-8) is available from the FHWA of private vendors to perform these calculations.

7.5.1 Culvert Sizing

Figures 7-3 through 7-6 contain a series of curves which show the discharge capacity per barrel for each of several sizes of similar type culverts for various headwater depths above the culvert invert at the inlet. The invert of the culvert is defined as the low point of its cross-section.

Each culvert size is described by two curves, one solid and one dashed. The numbers associated with each curve are the ratio of the length, L, in feet, to the slope, $100S_o$, in percent. The dashed curves represent the maximum $L/(100S_o)$ ratio for which the figures may be used without modification. The solid curve represents the division between outlet and inlet control. For values of $L/(100S_o)$ less than that shown on the solid curve, the culvert is operating under inlet control and the headwater depth is determined from the $L/(100S_o)$ value given on the solid curve. The solid-line inlet control curves are plotted from model test data. The dashed-line outlet control curves were computed for culverts of various lengths with relatively flat slopes. Free outfall at the outlet was assumed (tailwater depth is assumed to not influence the culvert performance).

For culverts flowing under outlet control, the head loss at the entrance was computed, and the hydraulic roughness was taken into account in computing resistance loss for full or partly full flow. Table 7-3 lists typical roughness coefficients for various types of culverts.

TABLE 7-3 Manning's Roughness Coefficients "n" for Culverts

Construction Materials	Design Coefficient
Concrete Pipe	0.012

Source: American Iron and Steel Institute, Modern Sewer Design

The headwater depth given by the charts is actually the difference in elevation between the culvert invert at the entrance and the total head, that is depth plus velocity head, for flow in the approach channel. In most cases, the water surface upstream from the inlet is close to this level and the chart determination may be used as headwater depth for practical design purposes. Where the approach velocity is in excess of 3.0 feet per second, the velocity head must be subtracted from the curve determination of headwater to obtain the actual headwater depth.

The procedure for sizing the culvert is summarized below.

A. List design data: Q (cfs), L (ft), allowable HW (ft), S_o (ft/ft), type of culvert barrel and entrance.

B. Compute $L/(100S_o)$.

C. Enter the appropriate capacity chart with the design discharge, Q.

D. Find the $L/(100S_o)$ value for the smallest pipe that will pass the design discharge. If this value is above the dotted horizontal line in Figures 7-3 through 7-6 use the nomographs to check headwater conditions.

E. If the computed $L/(100S_o)$ is less than the value of $L/(100S_o)$ given for the solid curve, then the value of HW is the value obtained from the solid line curve. If the computed L/(100S) is larger than the value for the dashed outlet control curve, then special measures must be taken, and the reader is referred to the Federal Highway Administration publications listed in the bibliography. Check the HW value obtained with the allowable HW. If the indicated HW is greater than the allowable HW, then try the next larger pipe size.

The advantage of the capacity charts (Figures 7-3 through 7-6)over the standard inlet nomographs (Figure 7-7 through 7-10) is that the capacity charts are direct where the nomographs are trial and error. The capacity charts can be used only when the flow passes through critical at the outlet. Critical depth for various culvert sections can be determined using the appropriate curves on Figures 7-11 and 7-12. When the critical depth at the outlet is less than the tailwater depth, the nomographs must be used. However, both methods will provide the same results where either of the two methods are applicable.

Inlet Control

The inlet control calculations determine the headwater elevation required to pass the design flow through the selected culvert configuration in inlet control. The approach velocity head may be included as part of the headwater if desired. The inlet control nomograph for standard inlets located at the end of this section (Figures 7-7 through 7-8) is used in the design process. The proper culvert selection procedure is outlined by Steps A through F.

A. Locate the selected culvert size and flow rate on the appropriate scales of the inlet control nomograph. (Note that for box culverts, the flow rate per foot of barrel width is used.)

B. Using a straightedge, carefully extend a straight line from the culvert size through the flow rate and mark a point on the first headwater/culvert height (HW/D) scale. The first HW/D scale is also a turning line.

C. If another HW/D scale is required, extend a horizontal line from the first HW/D scale (the turning line) to the desired scale and read the result.

D. Multiply HW/D by the culvert height, D, to obtain the required headwater (HW) from the invert of the control section to the energy grade line. If the approach velocity is neglected, HW equals the required headwater depth (HW_i). If the approach velocity is included in the calculations, deduct the approach velocity head from HW to determine HW_i.

E. Calculate the required depression (FALL) of the inlet control section below the stream bed as follows:

$$HW_d = EL_{hd} - EL_{sf} \tag{7-7}$$

$$FALL = HW_i - HW_d \tag{7-8}$$

where:

HW_d = design headwater depth, in feet

EL_{hd} = design headwater elevation, in feet

EL_{sf} = elevation of the stream bed at the face, in feet

FALL = required depression below the stream bed, in feet

HW_i = required headwater depth, in feet

Possible results and consequences of this calculation are:

1. If the FALL is negative or zero, set FALL equal to zero and proceed to step F.

2. If the FALL is positive, the inlet control section invert must be depressed below the stream bed at the face by that amount. If the FALL is acceptable, proceed to step F.

3. If the FALL is positive and greater than is judged to be acceptable, select another culvert configuration and begin again at step A.

F. Calculate the inlet control section invert elevation as follows:

$$EL_i = EL_{sf} - FALL \tag{7-9}$$

where:

EL_i = the invert elevation at the face of the culvert (EL_f) or at the throat of the culvert with a tapered inlet (EL_t), in feet

EL_{sf} = elevation of the stream bed at the face, in feet

FALL = required depression below the stream bed, in feet

Outlet Control

Outlet control calculations result in the headwater elevation required to convey the design discharge through the selected culvert in outlet control. The approach and downstream velocities may be included in the design process, if desired. The outlet control nomographs and critical depth charts located at the end of this section (Figures 7-9 through 7-12) are used in the design process. The proper procedure for outlet control is outlined below.

A. Determine the tailwater depth (TW) above the outlet invert at the design flow rate. This is obtained from backwater or normal depth calculations, or from field observations.

B. Enter the appropriate critical depth chart (Figure 7-19 or Figure 7-20) with the flow rate and read the critical depth (d_c). Remember that d_c cannot exceed D. The d_c curves are truncated for convenience when they converge. If an accurate d_c is required for $d_c > 0.9D$, consult the Handbook of Hydraulics[1], by Brater and King or other hydraulic references.

C. Calculate $(d_c + D)/2$

D. Determine the depth from the culvert outlet invert to the hydraulic grade line (h_o).

h_o = TW or $(d_c + D)/2$, whichever is larger.

E. From Table 7-2, obtain the appropriate entrance loss coefficient, k_e, for the culvert inlet configuration.

F. Determine the losses through the culvert barrel, H, using the outlet control nomograph.

1. If the Manning's "n" value given in the outlet control nomograph is different than the Manning's "n" for the culvert, adjust the culvert length using the formula:

$$L_1 = L\left[\frac{n_1}{n}\right]^2 \qquad (7\text{-}10)$$

where:

L_1	=	adjusted culvert length, in feet
L	=	actual culvert length, in feet
n_1	=	desired Manning's "n" value
n	=	Manning's "n" value from the outlet control chart

Then, use L_1 rather than the actual culvert length when using the outlet control nomograph.

2. Using a straightedge, connect the culvert size with the culvert length on the appropriate k_e scale. This defines a point on the turning line.

3. Again using the straightedge, extend a line from the discharge through the point on the turning line to the Head Loss (H) scale. Read H. H is the energy loss through the culvert, including entrance, friction, and outlet losses.

   Note: Careful alignment of the straightedge is necessary to obtain good results from the outlet control nomograph.

G. Calculate the required outlet control headwater elevation.

$$EL_{ho} = EL_o + H + h_o \qquad (7\text{-}11)$$

where:

EL_{ho}	=	required outlet control headwater elevation, in feet
EL_o	=	invert elevation at the outlet, in feet
H	=	total head loss, in feet
h_o	=	depth from the culvert outlet invert to the hydraulic grade line, in feet
	=	TW or $(d_c+D)/2$, whichever is larger

If it is desired to include the approach and downstream velocities in the calculations, add the downstream velocity head and subtract the approach velocity head from the right side of the equation.

H. If the outlet control headwater elevation exceeds the design headwater elevation, a new culvert configuration must be selected and the process repeated. Generally, an enlarged barrel will be necessary since inlet improvements are of limited benefit in outlet control.

Evaluation of Results

Compare the headwater elevations calculated for inlet and outlet control. The higher of the two is designated the controlling headwater elevation. The culvert can be expected to operate with that higher headwater for at least part of the time.

If the controlling headwater is based on inlet or outlet control determine the area of flow at the outlet based on the barrel geometry and the following:

A. Critical depth if the tailwater is at or below critical depth.

B. Tailwater depth if the tailwater is between critical depth and the top of the barrel.

C. The height of the barrel if the tailwater is above the top of the barrel.

Table 7-4 can be used to determine the cross sectional area of a circular pipe flowing part full. The ratio of d/D is the depth of water to the diameter of the pipe. The cross sectional area can be calculated with Equation 7-12.

$$A = C_a D^2 \tag{7-12}$$

where:

A	=	cross sectional area of pipe, in square feet
C_a	=	cross sectional area coefficient, Table 7-4
D	=	diameter of pipe, in feet

Repeat the design process until an acceptable culvert configuration is determined. Once the barrel is selected, it must be fitted into the roadway cross section. The culvert barrel must have adequate cover, the length should be close to the approximate length, and the headwalls and wingwalls must be dimensioned.

If outlet control governs and the headwater depth (referenced to the inlet invert) is less than 1.2D, it is possible that the barrel flows partly full though its entire length. In this case, caution should be used in applying the approximate method of setting the downstream elevation based on the greater of tailwater or $(d_c + D)/2$. If an accurate headwater is necessary, backwater calculations should be used to check the result from the approximate method. If the headwater depth falls below 0.75D, the approximate method should not be used.

TABLE 7-4 Cross Sectional Area Coefficients, C_a, for a Circular Conduit Flowing Part Full

d*/D	0.00	0.01	0.02	0.03	0.04	0.05	0.06	0.07	0.08	0.09
0.0	0.0000	0.0013	0.0037	0.0069	0.0105	0.0147	0.0192	0.0242	0.0294	0.0350
0.1	0.0409	0.0470	0.0534	0.0600	0.0668	0.0739	0.0811	0.0885	0.0961	0.1039
0.2	0.1118	0.1199	0.1281	0.1365	0.1449	0.1535	0.1623	0.1711	0.1800	0.1890
0.3	0.1982	0.2074	0.2167	0.2260	0.2355	0.2450	0.2546	0.2642	0.2739	0.2836
0.4	0.2934	0.3032	0.3130	0.3229	0.3328	0.3428	0.3527	0.3627	0.3727	0.3827
0.5	0.393	0.403	0.413	0.423	0.433	0.443	0.453	0.462	0.472	0.482
0.6	0.492	0.502	0.512	0.521	0.531	0.540	0.550	0.559	0.569	0.578
0.7	0.587	0.596	0.605	0.614	0.623	0.632	0.640	0.649	0.657	0.666
0.8	0.674	0.681	0.689	0.697	0.704	0.712	0.719	0.725	0.732	0.738
0.9	0.745	0.750	0.756	0.761	0.766	0.771	0.775	0.779	0.782	0.784

*d = depth of water
D diameter of pipe

Source: Brater and King, Handbook of Hydraulics [1]

If outlet control governs and the headwater depth (referenced to the inlet invert) is less than 1.2D, it is possible that the barrel flows partly full though its entire length. In this case, caution should be used in applying the approximate method of setting the downstream elevation based on the greater of tailwater or $(d_c + D)/2$. If an accurate headwater is necessary, backwater calculations should be used to check the result from the approximate method. If the headwater depth falls below 0.75D, the approximate method should not be used.

If the selected culvert will not fit the site, return to the culvert design process and select another culvert. If neither tapered inlets nor flow routing are to be applied, document the design. An acceptable design should always be accompanied by a performance curve which displays culvert behavior over a range of discharges.

7.5.2 Design Procedure

Due to problems arising from topography and other considerations, the actual design of a culvert installation is more difficult than the simple process of sizing culverts. The procedure is a guide to design since the problems encountered are too varied and too numerous to be generalized. However, the actual process presented should be followed to ensure that some special problem is not overlooked.

Design Computation Forms

The Culvert Design Form, Figure 7-13, has been formulated to guide the user through the design process. Summary blocks are provided at the top of the form for the project description, and the designer's identification. Summaries of hydrologic data of the form are also included. At the top right is a small sketch of the culvert with blanks for inserting important dimensions and elevations. The central portion of the design form contains lines for inserting the trial culvert description and calculating the inlet control and outlet control headwater elevations. Space is provided at the lower center for comments and at the lower right for a description of the culvert barrel selected.

The first step in the design process is to summarize all known data for the culvert at the top of the appropriate design form. This information will have been collected or calculated prior to performing the actual culvert design. The next step is to select a preliminary culvert material, shape, size, and entrance type. The user then enters the design flow rate and proceeds with the inlet control calculations.

Invert Elevations

After determining the allowable headwater elevation, the tailwater elevation, and the approximate length, invert elevations must be assumed. When considering ponded and non-ponded inlets, scour is not likely to occur in an artificial channel when the culvert has the same slope as the channel. To reduce the chance of failure due to scour, invert elevations corresponding to the natural grade should be used as a first trial. The flow velocity in the channel upstream from the culvert should be investigated to determine if scour will occur.

Culvert Diameter

After the invert elevations have been assumed and using the design computation forms, the capacity charts, and the nomographs, the diameter of pipe that will meet the headwater requirements should be determined. The smallest diameter that appears in the nomographs and capacity charts is 12 inches. Since the pipe roughness influences the culvert diameter, both concrete and corrugated metal pipe should be considered in design if both will satisfy the headwater requirements.

Limited Headwater

If there is insufficient headwater elevation to obtain the required discharge, it is necessary to oversize the culvert barrel, lower the inlet invert, use an irregular cross section, or use any combination of the above.

If the inlet invert is lowered, special consideration must be given to scour. The use of gabions or concrete drop structures, riprap, and headwalls with aprons and toe walls should be investigated and compared to obtain the proper design.

Culvert Outlet

The outlet velocity must be checked to determine if excessive scour will occur downstream. If scour is indicated, then riprap, an expanding end section, or a more sophisticated energy dissipating structure should be used.

Minimum Slope

To prevent sediment from plugging the culvert, the culvert slope must be equal to or greater than the slope required to maintain a minimum velocity of 3.0 feet per second for design flow. The slope should be checked for each design, and, if the proper minimum velocity is not obtained, the pipe diameter may be decreased, the slope steepened, a smoother pipe used, or a combination of these used.

Example 1 Pipe Culvert

Given: Design Discharge, Q_{100} = 200 cfs

Allowable Headwater Elevation = 108.0 ft

Shoulder Elevation = 111 ft
Elevation Inlet Invert = 100 ft

Culvert Length, L_a = 200 ft

Downstream channel approximates a 5-foot wide trapezoidal channel with 1.5H:1V side slopes, a Manning's "n" of 0.04, and S_o = 0.01 ft/ft

Find: Design a concrete pipe with a groove end. Set the inlet invert at the material stream bed elevation.

Note: Use Figures 7-8, 7-10 and 7-11 and Design Form, Figure 7-13.

7.6 OTHER INLET TYPES

7.6.1 Beveled Inlets

The hydraulics of a culvert can be improved by altering the inlet configuration. Beveled edges at the top of a culvert inlet will enhance the flow characteristics. Figures 7-14 through 7-17 are used to calculate the headwater for inlet control for beveled inlet edges.

Example 2 Box Culvert

Given: Design Discharge, Q_{100} = 300 cfs

Slope of stream bed, S_o = 0.02 ft/ft

Allowable Headwater Elevation = 110.0 ft

Shoulder Elevation = 113.5 ft

Elevation Inlet Invert = 100.0 ft

Culvert Length, L_a = 250 ft

Downstream channel approximates a 6-foot wide trapezoidal channel with 1H:1V side slopes and a Manning's "n" of 0.05.

Find: Design a reinforced concrete box culvert. Try both square and 45° beveled edges in a headwall. Do not depress the inlet (no FALL).

Note: Use Figures 7-7, 7-9, 7-23, and 7-15 and Design Form, Figure 7-13 for the solution.

7.6.2 Performance Curves

The objective of this design procedure is the hydraulic design of culverts using improved inlets. This design procedure hinges on the selection of a culvert barrel based on its outlet control performance curve, which is unique when based on elevation. The culvert inlet is then manipulated using edge improvements and adjustment of its elevation in order to achieve inlet-control performance compatible with the outlet control performance. The resultant culvert design will best satisfy the criteria set by the designer and make optimum use of the barrel selected for the site.

Performance curves are an integral part of the culvert design process and can be used to optimize the selected culvert design, particularly when using tapered inlets and/or upstream depressions. This optimization may involve further reduction in the barrel size required to pass the design flow at the design headwater, provision of a factor of safety against damages, or a more balanced design. The visualization of culvert performance provided by performance curves may lead to a further reduction in the size of the culvert barrel.

The procedures described here enable the designer to maximize the performance of the selected culvert or to optimize the design in accordance with an evaluation of site constraints, design parameters, and costs for construction and maintenance.

Outlet Control Performance Curves

Outlet control calculations are performed before inlet control calculations in order to select the smallest feasible barrel which can be used without the required headwater elevation in outlet control (HW_o) exceeding the allowable headwater elevation (AHW EL). For use in this procedure, the equation for headwater is in terms of elevation.

The full-flow outlet control performance curve for a given culvert (size, inlet edge, shape, or material) defines its maximum performance. Therefore, inlet improvements beyond the beveled edge or changes in inlet invert elevation will not reduce the required outlet control headwater elevation. This makes the outlet control performance curve an ideal limit for improved inlet design.

When the barrel size is increased, the outlet control curve is shifted to the right, indicating a higher capacity for a given head (see Figure 7-18). Also, it is generally true that increasing the barrel size will flatten the slope of the outlet control curve.

The outlet control curve passing closest to and below the AHW EL, for the design Q on the performance-curve graph defines the smallest possible barrel which will meet the hydraulic design criteria. However, that curve may be very steep (rapidly increasing headwater requirements for discharges higher than design), or the use of such a small barrel may not be practical. The proper culvert selection procedure to define the outlet control performance curves is:

A. Calculate headwater elevations, HW_o, at design discharge for trial culvert sizes, entrance conditions, shapes and materials.

B. Calculate headwater elevations at two additional discharge values one above and one below the design Q, in order to define outlet-control performance.

C. Plot outlet control performance curves for trial culvert sizes.

D. Select barrel size, shape and material.

This selection should not be based solely on calculations which indicate that the required headwater at the design discharge is near the AHW EL, but should also be based on outlet velocity as affected by material selection, the designer's evaluation of site characteristics, and the possible consequences of a flood occurrence in excess of the estimated design flood. A sharply rising outlet control performance curve may be sufficient reason to select a culvert of different size, shape or material. A typical series of outlet control performance curves is shown in Figure 7-19.

In order to calculate the barrel size required in outlet control, the applicable outlet control for standard inlets (Figures 7-9 through 7-10) nomograph may be used as follows:

A. Intersect the "Turning Line" with a line drawn between Discharge and Head, H. To estimate H, use the following equation:

$$H = \text{AHW EL} - \text{Outlet Invert Elevation} - h_o \qquad (7\text{-}13)$$

where h_o may be selected as the elevation at culvert height. Accuracy is not critical at this point.

B. Using the point on the "Turning Line", k_e, and the barrel length, draw a line defining the barrel size.

This size gives the designer a good first estimate of the barrel size and more precise sizing will follow rapidly.

Inlet Control Performance Curves

Inlet control performance curves should be drawn for the inlet edge configurations selected. These edges may include square edges, beveled edges, or the throat section of a tapered inlet. A FALL may be incorporated upstream of the inlet control section to lower the inlet control headwater elevation. To construct the inlet control performance curves, perform the following steps:

A. Calculate the inlet control headwater depth, H_f, at the culvert face at design discharge for the culvert selected based on outlet control.

B. Determine the required face invert elevation to pass the design discharge by subtracting H_f from the AHW EL.

1. If this invert elevation is above the stream bed elevation at the face, the invert would generally be placed on the stream bed and the culvert will then have a capacity greater than the design Q with headwater at the AHW EL.

2. If this required invert elevation is below the stream bed elevation at the face, the invert must be depressed using a FALL.

3. Add H_f to the invert elevation to determine HW_f. If HW_f is lower than HW_o, the barrel operates in outlet control at the design Q.

4. If the required FALL is excessive from the stand-point of aesthetics, economy and other engineering reasons, the inlet geometry must be improved or a larger barrel must be used. If square edges were assumed, repeat with beveled edges, and if beveled edges were assumed, try a side-tapered inlet.

5. If the FALL is acceptable, determine the inlet control performance by calculating the required headwater elevation using the discharges from the Outlet Control Performance curves, and the FALL determined above. $HW_f = H_f$ + EL face invert.

6. Plot the inlet control performance curve with the outlet-control performance curve.

Figure 7-20 depicts a series of inlet edge configurations, along with the outlet control performance curve for the selected barrel. Note that an inlet with square edges and no FALL will not meet the design conditions. Either square edges with a FALL or beveled edges with no FALL satisfy the design criteria.

Analyze the Effect of Additional FALL

It is apparent from Figure 7-20 that either additional FALL or inlet improvements such as a tapered-inlet would increase the culvert capacity in inlet control by moving the inlet control performance curve to the right toward the outlet control performance curve. If the outlet control performance curve of the selected culvert passes below the point defined by the AHW EL, and the design Q, there is an opportunity to optimize the culvert design by selecting the inlet so as to either increase its capacity to the maximum at the AHW EL or to pass the design discharge at the lowest possible headwater elevation.

Some possibilities are illustrated on Figure 7-21. The minimum inlet control performance which will meet the selected design criteria is illustrated by Curve A. In this design, the cost for inlet improvements and/or FALL is at a minimum and the inlet will pass a flood in excess of the design Q before performance is governed by outlet control. This performance is adequate in many locations, including those locations where headwaters in excess of the AHW EL would be tolerable.

Curve B illustrates the performance of a design which takes full advantage of the potential capacity of the selected culvert and the site to pass the maximum possible flow at the AHW EL. A safety factor in capacity is thereby incorporated by geometric improvements at the inlet, by a FALL, or by a combination of the two. Additional inlet improvement and/or FALL will not increase the capacity at or above the AHW EL.

There may be reason to pass the design flow at the lowest possible headwater elevation even though the reasons are insufficient to cause the AHW EL to be set at a lower elevation. The maximum possible reduction in headwater at the design Q is illustrated by Curve C. Additional inlet improvement and/or FALL will not reduce the required headwater elevation at the design Q.

The water surface elevation in the natural stream may be a limiting factor in design, i.e., it is not productive to design for headwater at a lower elevation than natural stream flow elevations. The reduction in headwater elevation illustrated by Curve C is limited by natural water surface elevations in the stream. If the water surface elevations in the natural stream had fallen below Curve D, curve D gives the maximum reduction in headwater elevation at the design Q. Flow depths calculated by assuming normal depth in the stream channel may be used to estimate natural water surface elevations in the stream at the culvert inlet.

Curve A has been previously established for the inlet control section. To define any other inlet control performance curve such as B, C or D for the same control section:

A. Select the point of interest on the outlet control performance curve.

B. Measure the vertical distance from this point to Curve A. This is the difference in FALL between Curve A and the curve to be established. For example, the FALL on the control section for Curve A plus the distance between Curves A and B is the FALL on the control section for Curve B.

Tapered Inlet Face Control Performance Curves

The face is the entrance of the barrel perpendicular to the flowline. The throat lies within the barrel section and is the intersection of the transition section and the barrel. The face or throat control is that section which governs the hydraulics of the structure (See Figure 7-27 for schematic)

Side-tapered inlets have an enlarged face area with a transition to the culvert barrel accomplished by tapering the sidewalls. The inlet has equal barrel and face heights except for the addition of a top bevel at the face. Slope-tapered inlets provide a greater head at the control section. The capacity depends largely upon the amount of FALL between the invert at the face and the invert at the throat section.

Either a side- or slope-tapered inlet with an upstream sump or slope-tapered inlet design may be used if a FALL is required at the throat control section of a tapered inlet. The minimum face design for the tapered inlet is one with a performance curve which does not exceed the AHW EL at the design Q. However, a "balanced" design requires that full advantage be taken of the increased capacity and/or lower headwater gained through use of various FALLS. This suggests a face-control curve which intersects the throat-control curve either: 1) at the AHW EL; 2) at the design Q; 3) at its intersection with the outlet control curve, or; 4) at other points selected by the designer.

These options are illustrated on Figure 7-22 by points "a" through "e" representing the intersections of face-control curves with the throat-control curves. The options are explained as follows:

A. Intersection of face- and throat-control curves at the AHW EL (Point a or b). For the minimum acceptable throat-control performance (Curve A), this is the minimum face size that can be used without the required headwater elevation (HW_f) exceeding the AHW EL at the design Q (Point a). For throat-control performance greater than minimum but equal to or less than Curve B, this is the minimum face design which makes full use of the FALL placed on the throat to increase culvert capacity at the AHW EL (Point b).

B. Intersection of face- and throat-control curves at the design Q (Points a, c or d). This option makes full use of the FALL to increase capacity and reduce headwater requirements at flows equal to or greater than design Q.

C. Intersection of the face-control curve with throat-control curve at its intersection with the outlet control curve (Points b or e) This option is the minimum face size which can be used to make full use of the increased capacity available from the FALL placed on the throat. It cannot be used where HW_f would exceed AHW EL at the design Q; e.g., with the minimum acceptable throat-control curve.

D. Variations in the above options are available to the designer. For example, the culvert face can be designed so that culvert performance will change from face control to throat control at any discharge at which inlet control governs. Options (A) through (C), however, fulfill most design objectives. Generally the design objective will be to design either the minimum face size to achieve the maximum increase in capacity possible for a given FALL, or the maximum possible decrease in the required headwater for a given FALL for any discharge equal to or greater than the design Q.

Figure 7-23 illustrates some of the possible tapered-inlet designs for a specific design situation. Note that the inlet dimensions for the side-tapered inlet are the same for all options. This is because performance of the side-tapered inlet nearly parallels the performance of the throat, and an increase in headwater on the throat by virtue of an increased FALL results in an almost equal increase in headwater on the face. Depressing the throat of a culvert with a side-tapered inlet requires additional barrel length.

Face dimensions and inlet length increase for the slope-tapered inlet as the capacity of the culvert is increased by additional FALL on the throat. No additional head is created for the face by placing additional FALL on the throat. On the other hand, use of a greater FALL at the throat of a culvert with a slope-tapered inlet does not increase culvert length.

7.6.3 Tapered Inlet Design

The following steps outline the design process for culverts with tapered inlets. Steps A and B are the same for all culverts, with and without tapered inlets.

A. Preliminary Culvert Sizing

Estimate the culvert barrel size to begin calculations.

B. Culvert Barrel Design

Complete the Culvert Design Form. (Figure 7-13) These calculations yield the required FALL at the culvert entrance. For the inlet control calculations, the appropriate inlet control nomograph is used for the tapered inlet throat. The required FALL is upstream of the inlet face section for side-tapered inlets and is between the face section and throat section for slope tapered inlets. Figure 7-13 should be completed for all barrels of interest. Plot outlet control performance curves for the barrels of interest and inlet control performance curves for the faces of culverts with nonenlarged inlets and for the throats of tapered inlets.

C. Tapered Inlet Design

Use the Tapered Inlet Design Form (Figure 7-24) for selecting the type of tapered inlet to be used and determining its dimensions. If a slope-tapered inlet with mitered face is selected, use the special design form shown in Figure 7-24. A separate form is provided for the mitered inlet because of its dimensional complexity.

To use the Tapered Inlet Design Form (Figure 7-24) or the design form for a slope-tapered inlet with mitered face (Figure 7-25), perform the following steps:

A. Complete Design Data

Fill in the required design data on the top of the form.

1. Flow, Q, is the selected design flow rate, from Figure 7-13.

2. EL_{hi} is the inlet control headwater elevation.

3. The elevation of the throat invert (EL_t) is the inlet invert elevation (EL_i) from Figure 7-13.

4. The elevation of the stream bed at the face (EL_{sf}), the stream slope (S_0), and the slope of the barrel (S) are from Figure 7-13. For the slope-tapered inlet with mitered face, estimate the elevation of the stream bed at the crest. This point is located upstream of the face sections.

5. The FALL is the difference between the stream bed elevation at the face and the throat invert elevation.

6. Select a side taper (TAPER) between 4H:1V and 6H:1V and a fall slope (S_f) between 2H:1V and 3H:1V. The TAPER may be modified during the calculations.

7. Enter the barrel shape and material, the size, and the inlet edge configuration from Figure 7-13. Note that for tapered inlets, the inlet edge configuration is designated the "tapered inlet throat."

B. Calculate the Face Width

1. Enter the flow rate, the inlet control headwater elevation (EL_{hi}), and the throat invert elevation on the design forms. For the slope-tapered inlet with mitered face, the face section is downstream of the crest. Calculate the vertical difference between the stream bed at the crest and the face invert (y). Y includes part of the total inlet FALL.

2. Perform the calculations resulting in the face width (B_f). Figures 7-26, 7-27, and 7-28 are face control nomographs. Figures 7-29 and 7-30 are used for throat control.

C. Calculated Tapered-Inlet Dimensions

If the FALL is less than D/4 (D/2 for a slope-tapered inlet with a mitered face), a side-tapered inlet must be used. Otherwise, either a side-tapered with a depression upstream of the face or a slope-tapered inlet may be used.

1. For a slope-tapered inlet with a vertical face, calculate L_2, L_3, and the TAPER. For the slope-tapered inlet with a mitered face, calculate the horizontal distance between the crest and the face section invert L_4. These dimensions are shown on the small sketches in the top center of Figure 7-24 and 7-35.

2. Calculate the overall tapered inlet length, L_1.

3. For a side-tapered inlet, check to assure that the FALL between the face section and the throat section is one foot or less. If not, return to step B with a revised face invert elevation.

D. Calculate the Minimum Crest Width

For a side-tapered inlet with FALL upstream of the face or for a slope-tapered inlet with a mitered face, calculate the minimum crest width and check it against the proposed crest width. In order to obtain the necessary crest length for a depressed side-tapered inlet, it may be necessary to increase the flare angle of the wingwalls, or to increase the length of crest on the sump. For a slope-tapered inlet with a mitered face, reduce the TAPER to increase crest width. Note that the TAPER must be greater than 4H:1V.

E. Fit the Design into the Embankment Section

Using a sketch based on the derived dimensions, and a sketch of the roadway section to the same scale, assure that the culvert design fits the site. Adjust inlet

dimensions as necessary but do not reduce dimensions below the minimum dimensions on the design form.

F. Prepare Performance Curves

Using additional flow rate values and the appropriate nomographs, calculate a performance curve for the selected face section. Do not adjust inlet dimensions at this step in the design process. Plot the face control performance curve on the same sheet as the throat control and the outlet control performance curves.

G. Enter Design Dimensions

If the design is satisfactory, enter the dimensions at the lower right of Figure 7-24 or Figure 7-25. Otherwise, calculate another alternative design by returning to step A.

7.6.4 Dimensional Limitations

The following dimensional limitations must be observed when designing tapered inlets using the design figures located at the end of the section.

Side-Tapered Inlets

A. 4H:1V $\leq$ Taper $\leq$ 6H:1V - Tapers greater than 6H:1V may be used but performance will be underestimated.

B. Wingwall flare angle range from 15° to 26° with top edge beveled or from 26° to 90° with or without bevels.

C. If FALL is used upstream of face, extend barrel slope upstream from face a distance of D/2 before sloping upward more steeply. The maximum slope of the apron is 2H:1V.

D. For pipe culverts, these additional requirements apply:

1. $D \leq E \leq 1.1D$

2. Square to circular transition length $\geq$ 0.5D

3. Square-throat dimension must equal the barrel diameter

Slope-Tapered Inlets

A. 4H:1V $\leq$ Taper $\leq$ 6H:1V - Tapers greater than 6H:1V may be used, but performance will be underestimated.

B. 3H:1V $\geq S_f \geq$ 2H:1V - If S_f > 3H:1V, use side-tapered design

C. Minimum L_3 = 0.5B

D. D/4 $\leq$ FALL $\leq$ 1.5D

For FALL < D/4, use side-tapered design

For Fall < D/2, do not use the slope-tapered inlet with mitered face

For FALL > 1.5D, estimate friction losses between face and throat and add additional losses to HW_t

$$H_i = \left[\frac{29n^2 L_i}{R^{1.33}}\right]\frac{Q^2}{2gA^2} \qquad (7\text{-}14)$$

where:

H_i	=	friction head loss in the tapered inlet, in feet
n	=	Manning's roughness coefficient for the tapered inlet
L_i	=	length of tapered inlet, in feet
Q	=	flow rate, in cubic feet per second
R	=	average hydraulic radius of the tapered inlet, in feet
	=	$\frac{A_f + A_t}{P_f + P_t}$
A_f	=	area at face, in square feet
A_t	=	area at throat, in square feet
P_f	=	perimeter at face, in feet
P_t	=	perimeter at throat, in feet
g	=	acceleration of gravity, 32.2 feet per second squared
A	=	average cross sectional area of tapered inlet, in square feet

$= \quad (A_f + A_t)/2$

E. Wingwall flare angle range from 15° to 26° with top edge beveled or from 26° to 90° with or without bevels.

F. For pipe culvert, these additional requirements apply:

1. Square to circular transition length $\geq$ 0.5D

2. Square-throat dimension must equal the barrel diameter. It is not necessary to check square-throat performance.

Example 3 **Box Culvert**

Given: Design Discharge, Q_{100} = 400 cfs

Elevation of Outlet Invert = 172.5 ft

Allowable Headwater Elevation = 195 ft

Elevation of Shoulder = 198 ft

Streambed Slope = 0.05 ft/ft

Culvert Length; L_a = 300 ft

The tailwater variation is as follows:

Flow (cfs)	T.W. (ft)
300	4.4
400	4.9
500	5.3

Find: Design the smallest possible barrel to pass the peak flow rate without exceeding the AHW EL. The culvert will be located in a rural area with a low risk of damage. Underground utilities limit the available FALL to 2.5 ft below the standard stream bed elevation at the inlet. Use a reinforced concrete box culvert with n = 0.012.

Note: Use Figure 7-9, 7-12, 7-21, 7-26, 7-27 and 7-29 and Design Forms, Figures 7-13 and 7-24 in this solution.

Reserved Page for Example 3

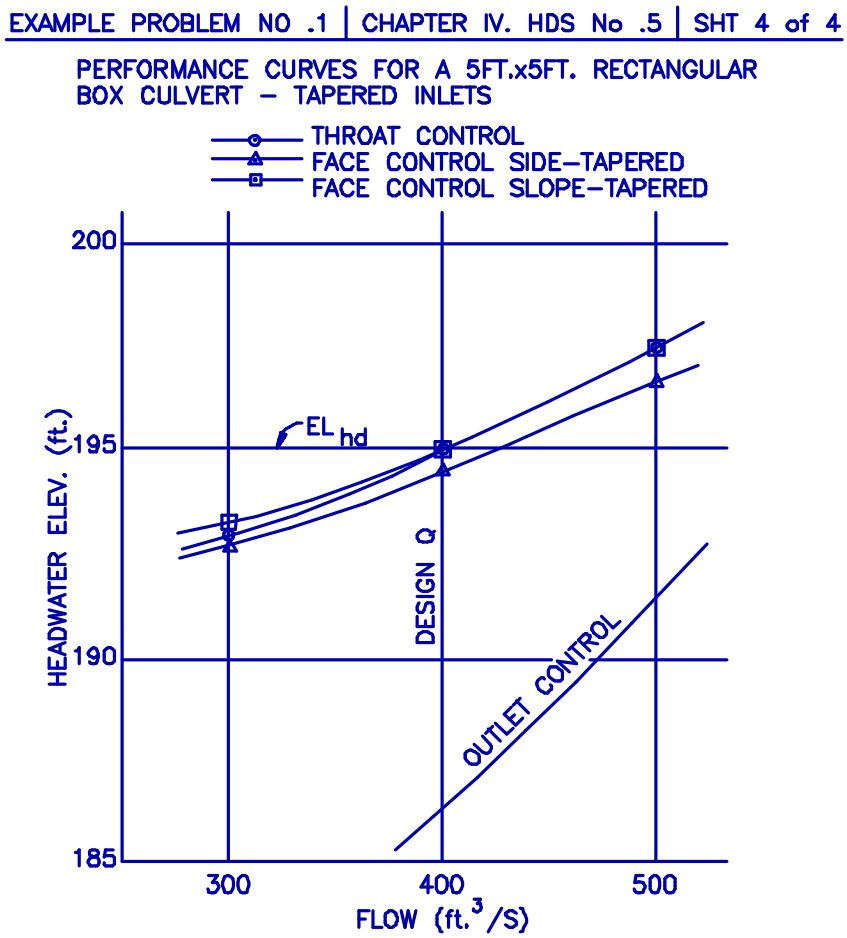

(Example 3 Continued)

Use a slope-tapered inlet with a vertical face since it is the smallest inlet in this case. Note that since the FALL is less than D/2, a slope-tapered inlet with a mitered face cannot be used at this site.

<u>Dimensions:</u>

B	=	5 ft	D	=	5 ft	B_f	=	8 ft
TAPER	=	4.33H:1V	S_f	=	2H:1V			
L_1	=	6.5 ft	L_2	=	4.0 ft	L_3	=	2.5 ft

Entrance: 26° to 90° wingwalls with no bevels

7.7 BRIDGE HYDRAULIC DESIGN

Bridges are required across nearly all open urban channels sooner or later and therefore, sizing the bridge openings is of paramount importance. When large culverts are used in lieu of bridges, the design approach often differs. Open channels with improperly designed bridges will either have excessive scour, or deposition, or will not be able to carry the design flow.

7.7.1 Design Approach

The method of planning for bridge openings must include water surface profile and hydraulic gradient analysis of the channel for the major storm runoff. Once this hydraulic gradient is established without the bridge, the maximum reasonable effect on the channel flow by the bridge should be determined.

Scour is the result of the erosive action of running water, excavating, and carrying away material from the bed of banks of streams. Local scour involves the removal of material from the channel bed or bank and is restricted to a minor part of the width of a channel. This scour occurs around piers, abutments, spurs, and embankments and is caused by the acceleration of the flow and the development of vortex systems induced by the obstruction to the flow. It is beyond the scope of this Manual to fully outline the procedure. The FHWA publication, Evaluating Scour at Bridges, Hydraulic Engineering Circular No. 18 (HEC-18)[7] outlines the procedure to evaluate scour at bridges.

7.7.2 Bridge Opening Freeboard

The distance between the design flow water surface and the bottom of the bridge deck will vary from case to case. However, the debris which may be expected must receive full consideration in setting the freeboard. Freeboard may vary from several feet to minus several feet. There are no general hard and fast rules. Each case must be studied separately.

In certain unusual cases, the designer might properly choose to intentionally cause ponding upstream from bridges to reduce downstream peaks during the storms creating flow greater than the major design runoff. This is sometimes done when downstream areas are highly developed, and the upstream areas have adjacent open space and park areas next to the channel. In these cases, there normally would be no freeboard allowed between the design water surface and the bridge deck bottom.

7.8 BRIDGE HYDRAULIC ANALYSIS

Bridge waterway design usually requires determination of the amount and extent of backwater caused by an encroachment in the flood plain. The bridge-affected water surface elevations will be higher than water surface elevations for unconstricted flow (natural profile). The standard step method can be used to compute the water surface profile on the basis of energy losses. The computations begin at one end of the study reach and proceed cross section by cross section to the other end of the river. The standard step method involves the solution of the dynamic equation of gradually varied flow. This method is discussed in Open Channel Hydraulics by Chow[2]. At bridge

crossings where the flow hydraulics is more complicated, momentum and other equations may be used to compute the water surface elevation changes.

Many computer programs are used for the computation of water surface profiles. Three widely used programs are HEC-2[11], HEC-RAS[12], and WSPRO[9]. HEC-2, Water Surface Profiles and HEC-RAS were developed by the U.S. Army Corps of Engineers. Water Surface Profile Computations (WSPRO) was developed by the U.S. Geological Survey for the Federal Highway Administration. The use of HEC-2, HEC-RAS, or WSPRO is recommended for bridge hydraulic analysis.

7.8.1 HEC-2 Model

HEC-2, Water Surface Profiles computer program used to analyze backwater effects from bridge waterways. The methodology incorporated into HEC-2, is based on several simplifying assumptions, but the model produces satisfactory results in many applications. The assumptions are as follows: 1) steady flow; 2) gradually varied flow; 3) one-dimensional flow with correction for horizontal velocity distribution; 4) small channel slope; 5) friction slope (averaged) constant between two adjacent cross sections, and; 6) rigid boundary conditions.

HEC-2 is intended for calculating water surface profiles for steady gradually varied flow in natural or man-made channels. Both subcritical and supercritical flow profiles can be calculated. The effects of various obstructions such as bridges, culverts, weirs, and structures in the flood plain may be considered in the computations. The computational procedure is based on the solution of the one-dimensional energy equation with energy loss due to friction evaluated with Manning's Equation. HEC-2 is also designed for application in flood plain management and flood insurance studies to evaluate floodway encroachments. Also, capabilities are available for assessing the effects of channel improvements and levees on water surface profiles.

HEC-2 computes energy losses caused by structures such as bridges and culverts in two parts. One part consists of the losses that occur in reaches immediately upstream and downstream from the bridge where contraction and expansion of the flow is taking place. The second part consists of losses at the structure itself and is calculated with either the normal bridge method, special bridge method, or the special culvert option.

The normal bridge method handles the cross section at the bridge just as it would any river cross section with the exception that the area of the bridge below the water surface is subtracted from the total area and the wetted perimeter is increased where the water surface elevation exceeds the low chord. The normal bridge method is particularly applicable for bridges without piers, bridges under high submergence, and for low flow through oval and arch culverts. Whenever flow crosses critical depth in a structure, the special bridge method should be used. The normal bridge method is automatically used by the computer, even though data was prepared for the special bridge method, for bridges without piers and under low flow control.

The special bridge method can be used for any bridge, but should be used for bridges with piers where low flow controls, for pressure flow, and whenever flow passes through critical depth when going through the structure. The special bridge method computes losses through the structure for low flow, weir flow and pressure flow or for any combination of these.

The culvert option is a new feature in Version 4.5. The special culvert method is similar to the special bridge method, except that the Federal Highway Administration (FHWA) standard equations for culvert hydraulics are used to compute losses through the structure.

7.8.2 HEC-RAS Model

HEC-RAS (River Analysis System) incorporates similar computational procedures as in HEC-2 with some minor additions for modeling bridges. This program was initially released in July, 1995 and is planned to be updated with additional features in the future. HEC-RAS is capable of modeling the bridge situations as described for HEC-2 and also has included additional bridge modeling options for pressure flow conditions. The main advantage offered by HEC-RAS is it's graphical user interface, providing a more user-friendly environment for the modeler.

7.8.3 WSPRO Model

The FHWA contracted with the U.S. Geologic Survey to develop a water surface profile computation program specifically oriented toward hydraulic design of stream highway crossings. WSPRO is a digital model for water surface profile computations for open-channel flow and is compatible with conventional techniques used in existing step-backwater analysis models. WSPRO incorporates several desirable features from existing models. Profile computations for free-surface flow through bridges are based on relatively recent developments in bridge backwater analysis and recognize the influence of bridge geometry variations. Pressure flow situations (girders partially or fully inundated) are computed using existing Federal Highway Administration techniques. Embankment overtopping flows, in conjunction with either free-surface or pressure flow through the bridge, can be computed. WSPRO is also capable of computing profiles at stream crossings with multiple openings (including culverts). WSPRO is equally suitable for water surface profile computations unrelated to highway design.

7.9 LIST OF SYMBOLS

The following is a list of symbols used in Section 7 of this Manual, their corresponding units and a brief description of the symbol.

Symbol	Units	Description
A_b	sq ft	Area of bend section of slope-tapered inlets
A_f	sq ft	Area of inlet face section
A_t	sq ft	Area of inlet throat section
AHW EL	ft	Allowable headwater elevation at culvert entrance
B	ft	Width of culvert barrel or diameter of pipe culvert
b	in	Dimension of side bevel
B_b	ft	Width of bend section of slope-tapered inlets
B_f	ft	Width of face section of improved inlets
C_d		Discharge coefficient based on bend section control
C_f		Discharge coefficient based on face section control
C_t		Discharge coefficient based on throat section control
D	ft	Height of box culvert or diameter of pipe culvert
d	in	Dimension of top bevel
d_c	ft	Critical depth of flow
E	ft	Height of side-tapered pipe-culvert face section, excluding bevel dimension
EL_{hi}		Elevation of the inlet control headwater of improved inlet
EL_i		Elevation of the inlet invert of improved inlets
EL_{sf}		Elevation of the stream bed at the face of improved inlets
EL_t		Elevation of the throat invert of improved inlets
FALL	ft	Approximate depression of control section below the streambed

g	ft/sec^2	Acceleration of gravity = 32.2
H	ft	Head or energy required to pass a given quantity of water through a culvert flowing in outlet control
H_b	ft	Depth of pool, or head, above the bend section invert
H_c	ft	Depth of pool, or head, above the crest
H_f	ft	Depth of pool, or head, above the face section invert
H_t	ft	Depth of pool, or head, above the throat section invert
HG Line	ft	Hydraulic grade line
HW	ft	Headwater elevation; subscript indicates control section (HW, as used in HDS 5, is a depth and is equivalent to H_f)
HW_c	ft	Headwater elevation required for flow to pass crest in crest control
HW_f	ft	Headwater elevation required for flow to pass face section in face control
HW_o	ft	Headwater elevation required for culvert to pass flow in outlet control
HW_t	ft	Headwater elevation required for flow to pass throat section in throat control
h_e	ft	Entrance head loss
h_f	ft	Friction head loss
h_o	ft	Elevation of equivalent hydraulic grade line referenced to the outlet invert
k_e		Entrance energy loss coefficient
k_b		A dimensionless effective pressure term for bend section control
k_t		A dimensionless effective pressure term for inlet throat control
L_a	ft	Approximate total length of culvert, including inlet face section control
L_1, L_2, L_3, L_4	ft	Dimensions relating to the improved inlet as shown in sketches of the different types of inlets

N		Number of barrels
n		Manning's roughness coefficient
P	ft	Length of depression
Q	cfs	Volume rate of flow
R	ft	Hydraulic radius = Area/Wetted Perimeter
S	ft/ft	Slope of culvert barrel
S_c	ft/ft	Slope of natural channel producing critical discharge
S_e	ft/ft	Slope of embankment
S_f	ft/ft	Slope of FALL for slope-tapered inlets (a ratio of horizontal to vertical)
S_n	ft/ft	Friction slope
S_o	ft/ft	Slope of natural channel
T	ft	Depth of the depression
Taper	ft/ft	Sidewall flare angle (also expressed as the cotangent of the flare angle)
TW	ft	Tailwater depth at outlet of culvert referenced to outlet invert elevation
V	ft/sec	Mean velocity of flow
V_c	ft/sec	Critical velocity
W	ft	Width of weir crest for slope-tapered inlet with mitered face
W	ft	Top width of depression
y	ft	Difference in elevation between crest and face section of a slope-tapered inlet with mitered face

7.10 BIBLIOGRAPHY

1. Brater, Ernest F. and Horace Williams King, Handbook of Hydraulics, Sixth Edition, McGraw-Hill Book Company Inc., New York, NY, 1976.

2. Chow, Ven Te, Open Channel Hydraulics, McGraw-Hill Book Company, Inc., New York, NY, 1959.

3. Federal Highway Administration, Hydraulic Charts for the Selection of Highway Culverts, Hydraulic Engineering Circular No. 5, US Government Printing Office, Washington, D.C., 1965.

4. Federal Highway Administration, US Department of Transportation, Capacity Charts for the Hydraulic Design of Highway Culverts, Hydraulic Engineering Circular No. 10, US Government Printing Office, Washington, D.C., 1972.

5. Federal Highway Administration, US Department of Transportation, Hydraulic Design of Highway Culverts, Hydraulic Design Series No. 5, National Technical Information Service, Springfield, VA.

6. Federal Highway Administration, US Department of Transportation, Hydraulic Design of Improved Inlets for Culverts, Hydraulic Engineering Circular No. 13, US Government Printing Office, Washington, D.C., August 1972.

7. Federal Highway Administration, US Department of Transportation, Evaluating Scour at Bridges, Hydraulic Engineering Circular No. 18, US Government Printing Office, Washington, D.C., November, 1995.

8. Federal Highway Administration, US Department of Transportation, Bridge Waterways Analysis Model: Research Report, National Technical Information Services, Springfield, VA, July 1986.

9. Federal Highway Administration, US Department of Transportation, Users Manual for WSPRO, A Computer Model for Water-Surface Profile Computations, National Technical Information Service, Springfield, VA, March 1990.

10. Hoggan, Daniel H., Computer Assisted Floodplain Hydrology and Hydraulics, McGraw-Hill Publishing Company, 1989.

11. Hydrologic Engineering Center, US Army Corps of Engineers, HEC-2 Water Surface Profiles Users Manual, Davis, CA, September 1990.

12. Hydrologic Engineering Center, US Army Corps of Engineers, HEC-RAS River Analysis System Users Manual, Davis CA, July, 1995.

SECTION 8
DETENTION BASINS

Page

8.1 INTRODUCTION 8-3

8.2 DETENTION BASIN DESIGN CRITERIA 8-3
- 8.2.1 Design Storm 8-4
- 8.2.2 Principal Outlet Works 8-4
- 8.2.3 Emergency Spillways 8-6

8.3 ON-SITE DETENTION 8-7
- 8.3.1 Parking Lots and Streets 8-7
- 8.3.2 Recreational Areas 8-7
- 8.3.3 Property Line Swales 8-8
- 8.3.4 Road Embankments 8-8
- 8.3.5 On-Site Ponds 8-8
- 8.3.6 Combinations 8-8

8.4 HYDRAULIC DESIGN METHODS 8-9
- 8.4.1 Modified Rational Method Analysis 8-9
- 8.4.2 Hydrograph Procedure for Storage Analysis 8-12
- 8.4.3 Modified Puls Routing Procedure 8-13

8.5 BIBLIOGRAPHY 8-16

LIST OF TABLES

Table Page

8-1 Acceptable Grasses for Vegetated Spillways 8-6
8-2 Development of a (2S/Δt) + O versus O Relationships 8-15

LIST OF FIGURES

Figure Page

8-1 Parking Lot Detention 8-17
8-2 Property Line Swale 8-18
8-3 Modified Rational Method Analysis Example Problem 2 8-19
8-4 Effects of Onstream and Offstream Reservoir on Storm Runoff Hydrograph 8-20

8.1 INTRODUCTION

On-site detention of runoff is an alternative to other methods of urban storm water management. Storage, which involves collecting excess runoff before it enters the main drainage system, can often be an effective and economical means of reducing peak flow rates and mitigating problems of flooding, pollution, soil erosion, and siltation.

Detention facilities can be used to lessen the impact of peak flows on downstream property, and for the improvement of water quality. Large regional facilities serving a number of developments are generally preferable to small on-site facilities serving only one subdivision or office complex.

The detention basin is the most widely used measure for controlling peak discharges from urbanizing areas. Basins can be designed to fit a variety of sites and can incorporate multiple-outlet spillways to meet requirements for multi-frequency control of flow. Measures other than a detention basin, such as infiltration trenches or porous pavement may be preferred in some locations. Any device selected, however, should be assessed as to its cost, function, maintenance requirements (frequency and type), and impact on downstream peak flows.

Storage is a means to mitigate problems associated with increased runoff caused by development. It is preferable to avoid causing the problems in the first place by minimizing the increase in runoff volumes or rates. This section outlines strategies to achieve those goals.

8.2 DETENTION BASIN DESIGN CRITERIA

The Rational Formula shall be used for detention basin design only for small areas (20 acres or less) as described in Section 8.4. Methods which include a runoff hydrograph, such as the SCS Tabular Method, HEC-1, or TR-20 shall be used for watersheds larger than 20 acres. Runoff hydrographs must be developed as part of the evaluation of drainage system performance during design and major storm events. Computations of runoff hydrographs which do not rely on a continuous accounting of antecedent moisture conditions shall assume antecedent moisture condition II.

Detention basins shall be designed to protect the safety of any children or adults coming in contact with the system during runoff events. Safety of storm water drainage system components is always a principal design criteria. The use of fencing around detention basins may be avoided by incorporating safety features into the design of the facilities. However, certain extreme cases may require the use of fences to protect the public. The shorelines of all detention basins at 100-year capacity shall be as level as practicable to prevent accidental falls into the basin and for stability and ease of maintenance.

The sideslopes of the banks of detention basins shall not be steeper than 4H:1V. All detention basins shall have a level safety ledge extending three (3) feet into the basin from the shoreline and two (2) feet below the normal water depth. Velocities throughout the drainage system shall be controlled to safe levels taking into consideration rates and depths of flow.

8.2.1 Design Storm

Detention basins shall be designed to limit the peak rate of discharge from the basin for the 10-year and 100-year events to the predevelopment rate or a rate which will not cause an increase in flooding or channel instability downstream when considered in aggregate with ultimate watershed development and downstream drainage capacities.

A minimum of one (1) foot of freeboard shall be added to the design water surface elevation. Backwater computations for runoff entering detention basins shall assume a starting elevation based on a compatible storm. It is the responsibility of the developer to determine if additional freeboard is necessary. The City Engineer or Director of Public Works reserves the right to require additional freeboard if deemed necessary for safety or maintenance considerations. The design storm shall pass through the outlet without overtopping the structure.

8.2.2 Principal Outlet Works

Where a single pipe outlet is to be used to discharge, it shall have a minimum inside diameter of 18 inches. Maintenance of outlets smaller than 18 inches is likely to be a problem. If design release rates call for outlets smaller than this, release structures such as perforated risers or flow control orifices shall be incorporated.

Depending on the geometry of the outlet structure, discharge for various headwater depths can be controlled by the inlet crest (weir control), the riser or barrel opening (orifice control), or the riser or barrel pipe (pipe control). Each of these flow controls shall be evaluated when determining the rating curve of the principal outlet. The following weir, orifice and pipe flow equations can be used to evaluate a single opening outlet structure. Multiple openings required a more rigorous analysis and is beyond the scope of this Manual. Solicit a hydraulics textbook for procedure.

Weir flow may be computed by the following equation:

$$Q = C\,L\,H_w^{\,3/2} \qquad (8\text{-}1)$$

where:

Q	=	discharge, in cubic feet per second
C	=	weir coefficient
L	=	length of the weir, in feet; for circular riser pipes, L is the pipe circumference
H_w	=	the depth of flow over the weir crest, in feet

Orifice flow may be computed by the following equation:

$$Q = C\,A\,(2gH_o)^{0.5} \tag{8-2}$$

where:

Q	=	discharge, in cubic feet per second
C	=	orifice coefficient
A	=	cross-sectional area of the pipe, in square feet
g	=	acceleration of gravity, 32.2 feet per second squared
H_o	=	head above the centerline of the pipe, in feet

The weir and orifice coefficients are a function of various hydraulic properties and dimensional characteristics. The designer is urged to solicit hydraulic textbooks such as Handbook of Hydraulics by Brater and King[1] and use engineering judgement.

Pipe flow may be computed by the following equation:

$$Q = A\left[\frac{2gH}{1 + k_b + k_e + k_f L}\right]^{0.5} \tag{8-3}$$

where:

Q	=	discharge, in cubic feet per second
A	=	cross-sectional area of the pipe, in square feet
g	=	acceleration of gravity, 32.2 feet per second squared
H	=	the difference between headwater and tailwater elevations, in feet
k_b	=	bend loss coefficient, use 0.6
k_e	=	entrance loss coefficient, use 0.5
k_f	=	friction loss coefficient
	=	$\frac{185n^2}{D^{4/3}}$
n	=	Manning's roughness coefficient
D	=	diameter of pipe, in feet
L	=	length of pipe, in feet

8.2.3 Emergency Spillways

The designer is responsible to determine if an emergency spillway or a spillway feature is needed for an embankment type detention facility. The City Engineer or Director of Public Works may require the designer to evaluate a more stringent design requirement including a breach analysis if there is a potential for loss of life. In addition, certain embankments are classified as dams and are required to meet rules established by the Texas Natural Resource Conservation Commission.

The position, profile, and length of the spillway are influenced by geologic and topographic features of the site. The cross section dimensions are governed by hydraulic elements and are determined by acceptable reservoir routing of the design storm. Most emergency spillways for detention ponds may be designed as grass-lined open channels. Table 8-1 presents acceptable grasses for vegetative spillways.

TABLE 8-1 Acceptable Grasses for Vegetated Spillways

Vegetative Type
Western Wheatgrass
Buffalograss
Bermudagrass
Tall Fescue
Blue grama

Discharge from the emergency spillways shall be directed to the main channel without causing erosion along the downstream toe of the dam. Emergency spillways proposed for the protection of earthen embankments shall be in full cut undisturbed soil, if possible, to avoid flows against constructed fill. The side slopes of the excavated channel in earth shall be no steeper than 4H:1V for ease of maintenance. Where the site limitations prevent a full channel cut, a wing dike shall be provided to direct spillway flows away from the downstream toe of the dam. Ready access to the emergency spillway system shall also be provided.

The configuration of the entrance channel from the reservoir to the control section of the emergency spillway shall be a smooth transition to avoid turbulent flow over the spillway crest. The outlet channel of the emergency spillway shall convey flow to the channel below the structure with a minimum of erosion. The slope of the exit channel usually follows the configuration of the abutment. Slopes, however, should not exceed 10 percent. In cases of highly erodible soils, it may be necessary to use other means of protection such as riprap, grouted rock or concrete paving to form the exit channel. As an alternative, detention storage can be increased to reduce the frequency or duration of use of the emergency spillway and thereby reduce erosion problems.

8.3 ON-SITE DETENTION

Potential advantages and disadvantages of on-site detention basins should be considered by the designer in the early stages of development. Discharge rates and outflow velocities are regulated to conform to the capacities and physical characteristics of downstream drainage systems. Energy dissipation and flow attenuation resulting from on-site storage can reduce soil erosion and pollutant loading. By controlling release flows, the impacts of the pollutant loading of stored runoff on receiving water quality can be minimized.

8.3.1 Parking Lots and Streets

There are two general types of storm water detention on parking lot surfaces. One type involves the storage of runoff in depressions constructed at drain locations. The stored water is drained into the storm sewer system slowly, using restrictions such as orifice plates in the drain. Proper design of such paved areas will restrict ponding to areas which will cause the least amount of inconvenience to the users of the parking areas.

For example, the parking lot of a shopping center will have the ponding areas located in the least-used portions of the lot, allowing customers to walk to their vehicles in areas of no ponding, except when the entire lot is filled with vehicles. Drainage of ponded water would be fairly rapid to prevent customer inconvenience. In most cases, the water should pond to a depth not to exceed 7 inches and the ponding area should be drained within 30 minutes or less after the rainfall. Computation of the amount of storage needed would be similar to the analysis used in designing detention basins on ground surfaces.

Another type of storm water detention on parking lots consists of using the paved areas of the lot to channel the runoff to grassed areas or gravel-filled seepage pits (Figure 8-1). Water from pavement should run through at least 30 feet of grass before entering an infiltration swale, trench or basin. The flow then infiltrates into the ground. Soil conditions and the effects of siltation in reducing infiltration must be considered.

Minimum slopes of one (1) percent are recommended in parking lot detention areas. Maximum slopes should not exceed four (4) percent to avoid gasoline spillage from tanks and to minimize vehicle traction problems on icy pavement.

8.3.2 Recreational Areas

Generally, recreational areas such as outdoor athletic fields have a substantial area of grass cover which often has a high infiltration rate. Generally, storm runoff from such fields is minimal. Grassed recreational fields can be utilized for the temporary detention of storm runoff without adversely affecting their primary function.

Temple contains many parks, both the neighborhood type and the large, central type. Parks, like recreational areas, create little runoff of their own; however, parks provide excellent detention storage potential for runoff from adjacent areas.

8.3.3 Property Line Swales

Subdivision planning and layout requires adequate surface drainage away from buildings. This is obtained by sloping the finished grade away from the buildings. When possible, the layout should call for a swale to be located along the back and/or side property line which then drains through the block (Figure 8-2). Such drainage should be guided away from storm sewers and towards natural channels. If storm sewers are the only point of discharge, the route should be as long as possible to allow infiltration. The final grading plan for the lot layout can be finalized to allow up to six (6) inches of temporary ponding along the property line.

Temporary ponding facilities along lot lines may include small controlled discharges or, if the subsoil conditions are favorable, such water may be percolated into the ground.

8.3.4 Road Embankments

The use of road embankments for temporary storage is an efficient method of attenuating the peak flows from a drainage basin.

The design criteria to be used for the temporary detention of water behind road embankments shall include consideration of the major storm runoff. The use of roadway embankments to help reduce downstream peak flows is encouraged. Planning for the usage of embankments must be done with thorough consideration to avoid damage to the embankment, the structure, and adjacent property.

8.3.5 On-Site Ponds

The construction of on-site ponds provides significant detention benefits when properly planned and designed. The use of such ponds is particularly encouraged in planned unit developments where large areas of grass and open space are common.

Controlled outlets for the surcharge storage can be used, and it is suggested that such outlets be designed to release at a rate that does not exceed the rate estimated for natural conditions or downstream channel capacity (whichever is smaller).

8.3.6 Combinations

In many instances, one on-site detention method cannot conveniently or economically satisfy the required amount of storm water storage. Limitations in storage capacities, site development conditions, soils limitations, and other related constraints may require that more than one method be utilized. For example, parking lot and surface pond storage might all be required to compensate for increases in runoff due to development of a particular site. Whichever combinations are suitable should be incorporated into the site development plan.

8.4 HYDRAULIC DESIGN METHODS

8.4.1 Modified Rational Method Analysis

The term Modified Rational Method Analysis is a procedure for manipulating the basic Rational Method to reflect the fact that storms with durations greater than the normal time of concentration for a basin will result in a larger volume of runoff even though the peak discharge is reduced. This greater volume of runoff produced by longer storm durations must be analyzed to determine the correct sizing of detention facilities.

The approach becomes more valid on progressively smaller basins, eventually reaching a size so small that watershed modeling is approached. The procedure should, therefore, be limited to relatively small areas such as rooftops, parking lots, or other upstream areas with tributary basins less than 20 acres. This would minimize major damage which could result from overtopping or failure of the proposed detention facility.

Figure 8-3 presents a family of curves for a theoretical basin described in the following example. These hydrographs are developed by using the basic Rational Method assumptions of constant rainfall intensity, time of concentration (t_c) for the longest flow path, and the coefficient of runoff. The typical Rational Method hydrograph with the peak discharge coinciding with the time of concentration for the basin is first calculated using the formula, $Q = CC_f iA$. Following this, a family of hydrographs representing storms of greater duration are developed. The rising limb and falling limb of the hydrograph are, in each case, equal to t_c for the basin. The area under the hydrograph is also equal to the peak discharge rate for that particular rainfall multiplied by the duration of the rainfall.

Example 1 Modified Rational Method

Given: Area: A = 2.0 acres
Type of development: commercial parking lot, fully paved, C = 0.88
Time of concentration: t_c = 8 minutes
Design Frequency = 25 years, C_f = 1.10
Use Intensity-Duration-Frequency Curves, Figure 2-1.

Find: Develop family of curves representing Modified Rational Method hydrographs for the 8-, 10-, 15-, 20-, 30- and 40-minute rainfall durations.

Solution:

$$Q_p = C\ C_f\ i\ A$$

Rainfall Duration (min)	Rainfall Intensity (in/hr)	Peak Runoff Rate (cfs)
8	7.97	15.4
10	7.44	14.4
15	6.36	12.3
20	5.88	11.4
30	4.92	9.5
40	4.40	8.5

The resulting storm hydrographs are depicted in Figure 8-3.

The next step in determining the necessary storage volume for the detention facility is to set a release rate and determine the volume of storage necessary to accomplish this release rate.

To determine the storage volume required, a reservoir routing procedure should be computed for each of the hydrographs, with the critical storm duration and required volume being determined. The importance of the particular project should govern the type of routing utilized. For small areas requiring repetitive calculations, such as parking lot bays, an assumed release curve is normally satisfactory. For larger areas, such as a pond in a small park with 20 acres or more of tributary area, a reservoir routing procedure would be more appropriate.

Figure 8-3 represents a method for small area detention analyses. The assumed release curve approximates a formal reservoir routing in much the same way the Rational Method Hydrograph approximates a true storm hydrograph. The curve allows for the low release rate at the beginning of a storm and an increasing release rate as the storage volume increases.

In normal flood routing, the maximum release rate will always occur at the point where the outflow hydrograph crosses the receding limb of the inflow hydrograph. For this reason, the design release rate is forced to coincide with that point on the falling limb of the hydrograph resulting from the storm of duration equal to the time of concentration for the basin. The release rate is held constant past this point. The storage volume is then found by determining the area between the inflow and release hydrographs. Example 2 continues the calculations initiated in Example 1 to determine the required storage volume.

The equation for the storm runoff volume, V_r, can be simplified as:

$$V_r = 60\ D\ Q_p \tag{8-4}$$

where:

V_r	=	storm runoff volume, in cubic feet
D	=	storm duration, in minutes
Q_p	=	peak runoff rate of the inflow hydrograph, in cubic feet per second

The equation for the required storage volume, V_s, can also be simplified as:

$$V_s = 60\ D\ (Q_p - Q_o) \tag{8-5}$$

where:

V_s	=	required storage volume, in cubic feet
D	=	storm duration, in minutes
Q_p	=	peak runoff rate of the inflow hydrograph, in cubic feet per second
Q_o	=	maximum release rate, in cubic feet per second

Example 2 Critical Storage Volume

Given: Drainage basin and other hydrologic information presented in Example 1.

Allowable release rate: $Q_o = 6.0$ cfs

Find: Determine the critical storage volume

Solution:

$$V_r = 60\ D\ Q_p$$

$$V_s = 60\ D\ (Q_p - Q_o)$$

Storm Duration (min)	Storm Runoff Volume (ft^3)	Required Storage Volume (ft^3)	
8	7,392	4,512	
10	8,640	5,040	
15	11,070	5,670	
20	13,680	6,480	Maximum
30	17,100	6,300	
40	20,400	6,000	

The critical storage volume is 6,480 cubic feet occurring for a 20-minute rainfall duration.

The limitations in the assumptions behind this method are evident. The approach becomes more valid on progressively smaller basins. The procedures should, therefore, be limited to relatively small areas where no major damage would result from overtopping or failure of the proposed detention facility. Care should be used when applying this method to areas in excess of 20 acres.

8.4.2 Hydrograph Procedure for Storage Analysis

The unit hydrograph procedure develops a hydrograph which provides a reliable solution for detention storage effects. The unit hydrograph procedure provides the engineer/designer greater flexibility for the representation of actual conditions to be modeled. The unit hydrograph procedure can be used for any size drainage area. For detention basin design, a minimum design storm duration of 24 hours should be used.

The development of the storm runoff hydrograph is presented in Section 2 of this Manual. A storm runoff hydrograph is presented in Figure 8-4 which represents inflow to a reservoir. The analysis for the reservoir storage must take into consideration the characteristics of the outlet pipe, the discharge of which is shown in Figure 8-4 as a solid line. The shape of the solid line reflects the carrying capacity of the outlet works with various headwater elevations. The higher the elevation of the water surface in the reservoir the greater the discharge through the outlet works. The area between the dashed line and the hydrograph of storm outflow can be planimetered to determine the volume of storage required to reduce channel flow from 200 cubic feet per second to 100 cubic feet per second.

For offstream storage the basic approach to the analysis is presented in Figure 8-4. In this case, the peak of the storm hydrograph is routed over a side channel spillway into a ponding area adjacent to the channel. The water removed from the channel, represented by the shaded area of the hydrograph, provides for a reduction in the peak channel flow from 200 cubic feet per second to about 100 cubic feet per second.

8.4.3 Modified Puls Routing Procedure

A flood routing procedure may be used to determine the required volume of the detention basin. Several flood routing procedures are available in published texts. One commonly used procedure is the Modified Puls. The data needed for this routing procedure are the inflow hydrograph, the physical dimensions of the storage basin, the maximum outflow allowed, and the hydraulic characteristics of the outlet structure or spillway.

To perform the Modified Puls procedure, the inflow hydrograph, depth-storage relationship, and depth-outflow relationship must be determined. They are then combined in a routing routine. The results of the routing are the ordinate of the outflow hydrograph, the depth of storage, and the volume of storage at each point in time of the flood duration.

The routing period, or time interval, Δt, is selected small enough so that there is a good definition of the hydrograph and the variation in the hydrograph during the period Δt is approximately linear. This can usually be accomplished by setting $\Delta t = 5$ minutes.

Several assumptions are made in this procedure and include the following:

A. The entire inflow hydrograph is known.

B. The storage volume is known at the beginning of the routing.

C. The outflow rate is known at the beginning of the routing.

D. The outlet structures are such that the outflow is uncontrolled and the outflow rate is dependent only on the structure's hydraulic characteristics.

The derivation of the routing equation begins with the conservation of mass which states that the difference between the average inflow and average outflow during some time period Δt is equal to the change in storage during that time period. This can be written in equation form as:

$$I - O = \Delta S / \Delta T \qquad (8\text{-}6)$$

where:

I	=	average inflow rate
O	=	average outflow rate
DS	=	change in storage volume
Δt	=	routing period

If inflow during the period is greater than outflow, then DS is positive and the pond gets deeper. If inflow is less than outflow during the period, then DS is negative and the pond gets shallower. Using the assumptions made previously, this equation can be rewritten as:

$$\left[\frac{I_1 + I_2}{2}\right] + \left[\frac{O_1 + O_2}{2}\right] = \left[\frac{S_2 - S_1}{\Delta t}\right] \tag{8-7}$$

where:

I_1	=	inflow rate at time interval 1
I_2	=	inflow rate at time interval 2
O_1	=	outflow rate at time interval 1
O_2	=	outflow rate at time interval 2
S_1	=	storage volume at time interval 1
S_2	=	storage volume at time interval 2
Δt	=	routing period

Multiplying both sides by two and separating the right-hand side yields:

$$\left(I_1 + I_2\right) - \left(O_1 - O_2\right) = \left[2\frac{S_2}{\Delta t} - 2\frac{S_1}{\Delta t}\right] \tag{8-8}$$

Rearranging so that all the known terms are on the left-hand side and all the unknown terms on the right-hand side yields the final routing equation:

$$\left(I_1 + I_2\right) + \left[2\frac{S_1}{\Delta t} - O_1\right] = \left[2\frac{S_2}{\Delta t} + O_2\right] \tag{8-9}$$

However, Equation 8-9 has two unknowns, S_2 and O_2. A second equation is needed which relates storage and outflow. If outflow is a direct function of reservoir depth (as it is with uncontrolled outflow), there is a direct relationship that exists between reservoir elevation, reservoir storage, and outflow. Therefore, for a particular elevation, there is an answer for storage and outflow (S and O). A relationship between O and $(2S/\Delta t) + O$ is determined for several elevations and plotted on logarithmic graph paper. The routing equation is solved by adding all the known terms on the left-hand side. This yields a value for $(2S_2/\Delta t) + O_2$. This value is found on the log-log plot of $(2S/\Delta t) + O$ versus O.

The $(2S/\Delta t) + O$ versus O relationship is derived by combining the depth-storage relationship and the depth-outflow relationship, as previously discussed. This is shown in Table 8-2. Columns 1, 2, and 3 are tabulations of the depth-storage and depth-outflow relationships for a specific detention facility.

In column 4, the units of $2S/\Delta t$ and O must be the same. If O is in cubic feet per second, then $2S/\Delta t$ must be changed to cubic feet per second. For a routing time interval of 5 minutes:

$$\frac{2\ S\ ac\text{-}ft}{5\ min} \times \frac{1\ cfs\text{-}day}{1.98\ ac\text{-}ft} \times \frac{1440\ min}{1\ day} = 291\ S$$

Thus, $\frac{S}{\Delta t} + \frac{O}{5\ min} = 291\ S + O$ for $\Delta t =$

where: S has units of acre-feet, O has units of cfs, and 2S/Δt has units of cfs

TABLE 8-2 Development of a (2S/Dt) + O versus O Relationship

Depth (ft) (1)	Storage, S (acre-feet) (2)	Outflow, O (cfs) (3)	(2S/Dt) + O (cfs) (4)
0	0.0	0	0
2	0.1	40	69
4	0.6	138	313
6	3.0	274	1,147
8	11.0	426	3,627
10	32.0	560	9,872
12	72.0	671	21,623
14	131.0	765	38,886

8.5 BIBLIOGRAPHY

1. Brater, Ernest F. and Horace Williams King, Handbook of Hydraulics, Sixth Edition, McGraw-Hill Book Company, 1976.

2. Poertner, Herbert G., Practices in Detention of Urban Storm Water Runoff, American Public Works Association Special Report No. 43. Chicago, IL, 1974.

3. Soil Conservation Service, US Department of Agriculture, Earth Dam and Reservoirs, Technical Release No. 60, US Government Printing Office, Washington, D.C., October 1985.

4. Soil Conservation Service, US Department of Agriculture, Urban Hydrology for Small Watersheds, Technical Release No. 55, US Government Printing Office, Washington, D.C., June 1986.

5. Ward, Andy; Haan, Tom; and Tapp, John, The DEPOSITS Sedimentation Pond Design Manual, University of Kentucky Institute for Mining and Minerals Research, Lexington, KY, 1979.

6. Wright-McLaughlin Engineering, Urban Storm Drainage Criteria Manual, Denver Regional Council of Governments, Denver, CO, 1969, revised 1984.

SECTION 9

STORM WATER BEST MANAGEMENT PRACTICES

Page

9.1 STORM WATER MANAGEMENT PLANS 9-6

9.1.1 Purpose 9-6

9.1.2 Plan Requirements 9-6

9.1.2.1 Site Description 9-6

9.1.2.2 Controls 9-7

9.1.2.3 Maintenance 9-7

9.1.2.4 Inspections 9-8

9.1.3 Bibliography 9-9

9.2 CONSTRUCTION (TEMPORARY) BEST MANAGEMENT PRACTICES 9-10

9.2.1 Introduction 9-10

9.2.1.1 Erosion 2-3 9-10

9.2.1.2 Factors Influencing Erosion 9-10

9.2.2 Standards for Erosion and Sediment Control 9-11

9.2.3 The Sediment Control Plan 9-13

9.2.3.1 Sediment Control Practices 9-14

9.2.3.2 Drainage Plan 9-15

9.2.4 Standards for Structural Practices 9-15

9.2.4.1 Straw Bale Barrier 9-15

9.2.4.2 Silt Fence 9-16

9.2.4.3 Stabilized Construction Entrance 9-19

9.2.4.4 Sediment Basin 9-20

9.2.4.5 Diversion 9-24

9.2.4.6 Grassed Waterway or Outlet 9-28

9.2.4.7 Lined Waterway or Outlet 9-30

9.2.4.8 Riprap 9-32

9.2.5 Standards for Vegetative Practices for Critical Area Stabilization 9-33

Definition 9-33

Purpose 9-33

Application 9-33

Design Criteria 9-33

9.2.6 Bibliography 9-33

9.3 POST CONSTRUCTION (PERMANENT) BEST MANAGEMENT PRACTICES 9-37

9.3.1 Required Permanent BMPs 9-37

9.3.1.1 Site Layout 9-37

9.3.1.2 Creek Buffer Zone 9-37

9.3.1.2a Establishment of Creek Buffer Zones 9-37

9.3.1.2b Creek Buffer Zone Restrictions 9-38

9.3.1.2c Design Standards for Creek Buffer Zones 9-39

9.3.1.2d Creek Buffer Zone Designation Requirements 9-39

9.3.1.2e Licensed Professional Engineer's Responsibilities 9-39

9.3.2 Required Permanent BMP Credit Point Requirements 9-40

9.3.3 Additional BMPs 9-43

9.3.3.1 Vegetated Swales 9-43

9.3.3.2 Vegetated Filter Strips..... 9-44

9.3.3.3 Permeable and Semi-Pervious Pavement..... 9-45

9.3.3.4 Discharge of Roof Drains to Pervious Surface 9-47

9.3.3.5 Extended Detention Basins for Storm Water Quality Benefits..... 9-47

9.3.3.6 Retention Ponds..... 9-50

9.3.3.7 Detention Pond Outlet for Erosion Protection and Storm Water Quality Benefits..... 9-52

9.3.3.8 Subsurface Treatment Devices..... 9-53

9.3.3.9 Landscaping..... 9-54

9.3.3.10 Cluster Design 9-55

9.3.3.11 Preservation of Tree Canopy..... 9-57

9.3.4 Bibliography 9-58

LIST OF TABLES

9-1 Silt Fence Slope Criteria..... 9-17

9-2 Silt Fence Fabric Criteria..... 9-18

9-3 Stabilized Construction Entrance Design Criteria 9-20

9-4 Minimum Top Width Embankment (Earth Fill) 9-24

9-5 Diversion Frequency and Freeboard 9-26

9-6 Selection of Vegetal Retardance 9-26

9-7 Permissable Velocities..... 9-27

9-8 Permissable Side Slopes for Lined Waterway 9-31

9-9 Additional BMP Requirements 9-40

9-10 Best Management Practices Design Criteria..... 9-41

9-11 Asphalt Mix 9-46

LIST OF FIGURES

Fig. 9-1 Standard Symbols for Soil Erosion and Sediment Control.....
..... 9-59

Fig. 9-2 Straw Bale Barrier..... 9-60

Fig. 9-3 Silt Fence..... 9-61

Fig. 9-4 Stabilized Construction Entrance..... 9-62

Fig. 9-5 Sediment Basin..... 9-63

Fig. 9-6 Diversion 9-64

Fig. 9-7 Grassed Waterway or Outlet 9-65

Fig. 9-8 Lined Waterway or Outlet..... 9-66

Fig. 9-9 Riprap 9-67

Fig. 9-10 Creek Buffer Zone..... 9-68

Fig. 9-11 Vegetated Swales 9-69

Fig. 9-12 Vegetated Filter Strips..... 9-70

Fig. 9-13 Permeable and Semi-Pervious Pavement

Fig. 9-13a Permeable Concrete 9-71

Fig. 9-13b Porous Asphalt..... 9-72

Fig. 9-14 Discharge of Roof Drains to Pervious Surface 9-73

Fig. 9-15 Subsurface Treatment Devices

Fig. 9-15a SC-Type Separator..... 9-74

Fig. 9-15b CPS-Separator..... 9-75

Fig. 9-15c API-Separator..... 9-76

Fig. 9-16 Extended Detention Basin..... 9-77

Fig. 9-17 Retention Ponds 9-78

Fig. 9-18 Detention Pond Outlet For Erosion Protection and Storm Water Quality Benefits 9-79

Fig. 9-19 Cluster Design

Fig. 9-19a Pre-Project..... 9-80

Fig. 9-19b Post Project 9-81

Fig. 9-20 Preservation of Existing Tree Canopy 9-82

9.1 STORM WATER MANAGEMENT PLANS

9.1.1 Purpose. In accordance with Chapter 27, Article II of the City of Temple's Code of Ordinances (Post Construction Storm Water Runoff Control Ordinance), proposed new development and significant redevelopment of one (1) or more acres or any land situated along a creek will be required to submit Storm Water Management Plans (SWMP) that propose structural, non-structural or vegetative controls to reduce pollutants in storm water runoff. Approval requirements for SWMPs are outlined in Sec. 27-5 of City Code.

9.1.2 Plan Requirements. The SWMP should contain a site description, planned controls, and procedures for maintenance and inspection. The contents of a SWMP are described below and in Sec. 27-6 of City Code.

9.1.2.1 Site Description.

a. Site location.
b. Names, addresses, and phone numbers of owner and contact person.
c. Type of development or redevelopment.
d. Nature of activities.
e. Any existing NPDES storm water permit numbers or provide a copy of the General Permit Notice of Intent (NOI) or NPDES permit application.
f. Estimates of the total site area and the total area affected by the development.
g. Site map(s).
    1. Vicinity map.
    2. Areas of development.
    3. Areas not to be developed.
    4. Drainage areas and their acreage, patterns and proposed grading plan.
    5. Wetlands and surface waters.
    6. Locations and listing of activities which may generate pollutants and potential discharge, including hazardous materials treatment, storage or disposal facilities, parking areas, loading areas, etc.
    7. Location and listing of structural controls, and non-structural controls as applicable, that are identified in the plan.
    8. Locations where storm water is discharged to the MS4 and the name of the MS4 operator.
h. Natural Resource Inventory.
    1. Soil conditions.
    2. Forest cover.
    3. Topography.
    4. Wetlands.
    5. Other native vegetative areas on the site.

9.1.2.2 Controls.

a. Non-Structural Controls – Describe non-structural best management practices (BMPs) and how they will be used at the site.
b. Structural Controls – Structural BMPs should be shown on construction drawings. Supporting data (specifications, calculations, etc.) should be provided upon request.

9.1.2.3 Maintenance.

A maintenance plan meeting the requirements of Sec. 27-6 of City Code developed by the design engineer and acceptable to the City of Temple will be required prior to approval of the SWMP. The following information should be included in the proposed maintenance plan.

a. Specification of routine and non-routine maintenance activities to be performed.
b. A schedule for maintenance activities.
c. Provision for access to the tract by the City of Temple or other designated inspectors.
d. Name, qualifications and contact information for the party(ies) responsible for maintaining the BMP(s).
e. The plan should be signed and dated by the party responsible for maintenance.

General maintenance items and frequencies are listed below. Some items will not be applicable to all BMPs.

a. Sediment removal – at least twice per year or when the depth reaches 3-inches.
b. Erosion Control – side slopes and embankment may periodically suffer from slumping and erosion and should be repaired as soon as problems are identified.
c. Irrigation areas – maintain in natural state to greatest extent possible such that spray from sprinkler heads is not impeded; tree and shrub trimmings and larger debris should be removed immediately.
d. Mowing – grass areas should be mowed at least twice per year to limit vegetation height to 18-inches; more frequent mowing is required for aesthetic appeal in landscaped areas; mowing should be done either with a mulching mower or by capturing and removing grass clippings with a bagger or by raking.
e. Debris and litter removal – perform at least twice per year, usually in conjunction with mowing, or more frequently as needed.
f. Structural repairs – damage to structural elements (pipes, concrete drainage structures, retaining walls, etc.) should be identified and repaired immediately. These repairs should include patching of cracked concrete, sealing of voids, and removal of vegetation from cracks and joints.
g. Pest management – an Integrated Pest Management (IPM) Plan should be developed for vegetated areas. This plan should specify how problem insects and weeds will be controlled with minimal or no use of insecticides or herbicides.

Maintenance of BMPs frequently requires disposal of accumulated sediment and other material. These materials are normally classified as special wastes when disposed of in municipal landfills. Special waste is a waste that requires special handling at a Type I Municipal Solid Waste (MSW) landfill. The process to obtain authorization to dispose of a special waste begins with a request for approval called the "Request for Authorization for Disposal of Special Waste TCEQ Form 0152." The request is completed by the generator and submitted to the MSW permits section of the TCEQ for Executive Director review/approval. The MSW permits section performs the review described in 30 TAC 330.136 or most current applicable subsection of 30 TAC. A maintenance plan developed by the design engineer and acceptable to the City of Temple will be required prior to approval of the SWMP. The following information should be included in the proposed maintenance plan.

9.1.2.4 Inspections.

BMP facilities must be inspected at regular intervals, preferably during or immediately after a period of wet weather, to evaluate facility operation. Below is a list of frequencies for inspections for various BMP facilities.

a. Grassy Swales – At least 2 times per year.
b. Vegetated Filter Strips – At least 2 times per year.
c. Permeable and Semi-Pervious Pavement – At least 2 times per year.
d. Extended Detention Basins, Retention Ponds, Detention Ponds – At least 2 times per year.
e. Irrigation Systems, Pumps – Every 2 months.
f. Subsurface Treatment Devices – After rain events.
g. Preserved Tree Canopies – At least 2 times per year.

During each inspection, erosion areas inside and downstream of the BMP must be identified and repaired or revegetated immediately. With each inspection, any damage to the structural elements of the system (pipes, concrete drainage structures, retaining walls, etc.) must be identified and repaired immediately. Cracks, voids and undermining should be patched/filled to prevent additional structural damage. Trees and root systems should be removed to prevent growth in cracks and joints that can cause structural damage.

Irrigation systems and pumps should be inspected for functionality. Broken or 'frozen' sprinkler heads should be replaced immediately. Pumps shall be inspected and maintenance performed to the manufacturer's specifications.

Subsurface treatment devices should be inspected for larger debris captured during rain events which could plug openings in the device as well as sediment accumulation.

Inspections of tree canopies should include identification of sick/dying/dead trees to be removed from the canopy area.

9.1.3 Bibliography.

1. Barrett, M., Texas Commission on Environmental Quality, *Edwards Aquifer Technical Guidance Manual*. June 2005.

2. Houston, City of, Harris County, Harris County Flood Control District, *Stormwater Quality Management Guidance Manual*. 2001 Edition.

9.2 CONSTRUCTION (TEMPORARY) BEST MANAGEMENT PRACTICES

9.2.1 Introduction. Sedimentation involves three basic processes: erosion, transportation, and deposition. These are natural geologic phenomena which have been in continuous operation since the beginning of time. Man's land development activities, however, have initiated severe, highly undesirable, and damaging alterations in the natural sedimentation cycle by drastically accelerating the erosion-sedimentation process.

9.2.1.1 Erosion.

This term includes all of the processes by which soil or rock material is loosened and removed, that is, weathering, solution, downcutting, and transportation. Soil erosion is usually caused by the force of water falling as raindrops and by the force of water flowing in rills and streams. The raindrops falling on bare or sparsely vegetated soil particles but have little capacity for transporting them. Water running in a sheet on the surface of the ground picks up these particles and carries them along as it flows downhill towards a stream system. As the runoff gains in velocity and concentration, it detaches more soil particles, cuts rills and gullies into the surface of the soil, and adds to its sediment load. Coalescing rivulets produce streams which have a larger volume and usually increased velocity; hence, a greater capacity to remove sediment and transport it downstream. The greater the distance the water runs uncontrolled, the greater its erosive force and the greater the resultant damage. Moreover, control becomes increasingly more difficult as the distance and volume increase.

9.2.1.2 Factors Influencing Erosion.

The erosion potential of a site is principally determined by the erodibility of the soil, vegetative cover, topography, climate and season. Although the factors are interrelated as determinants of erosion potential, they are discussed separately for ease of understanding.

The vulnerability of a soil to erosion is known as erodibility. The soil structure, texture, and percentage of organic matter influence it erodibility. The most erodible soils generally contain high proportions of silt and very fine sand. The presence of clay or organic matter tends to decrease soil erodibility. Clays are sticky and tend to bind soil particles together. Organic matter helps maintain stable soil structure.

There are several ways in which vegetation protects soil from the erosive forces of raindrop impact and runoff scour. The top growth shields the soil surface from raindrop impact while the root mass holds soil particles in place. Grass buffer strips can be used to filter sediemtn from the surface runoff. Grasses slow the velocity of runoff which results in sedimentation, and also helps maintain the infiltration capacity of the soil. The establishment and maintenance of vegetation can be most effective in minimizing erosion during development.

Slope length and steepness are key influences on both the volume and velocity of surface runoff. Long slopes deliver more runoff to the base of slopes and steep slopes increase runoff velocity; both conditions enhance the potential for erosion to occur.

Erosion potential is also affected by the climate of the area. Rainfall characteristics, such as frequency, intensity, and duration directly influence the amount of runoff that is generated. As the frequency of rainfall increases, water has less chance to drain through the soil between storms. The soil will remain saturated for longer periods of time and storm water runoff volume may be potentially greater. Therefore, when rainfall events are frequent, intense, or lengthy, erosion risks are high.

Seasonal variation in wind, humidity, temperature and rainfall defines periods of high erosion potential during the year. A high erosion potential may exist in the spring when the surface soil first thaws and the ground underneath remains frozen. A low intensity rainfall may cause substantial erosion as infiltration is impossible because of the frozen subsoil. The erosion potential is also high during the summer months because of more frequent, intensity rainfall.

9.2.2 Standards for Erosion and Sediment Control.

The principles of reducing erosion and sedimentation from developing areas are:

A. Plan the development to fit the particular topography, soils, waterways, and natural vegetation at the site.

   Initially, this is best achieved through adoption of a general land-use plan based upon a comprehensive inventory of soil, water, and related resources.

   Slope length and gradient are key elements in determining the volume and velocity of the runoff and its associated erosion. As both slope length and steepness increase, the rate of runoff increases and the potential for erosion is magnified. Where possible, steep slopes should be left undisturbed. By limiting the length and steepness of the designed slopes, runoff volumes and velocities can be reduced and erosion hazards minimized.

   Soils which contain a high proportion of silt and very fine sand are generally the most erodible. The erodibility of these soils is decreased as the percentage of clay organic matter content increases. Well-drained and well-graded gravel-sand mixtures with little silt are the least erodible soils. By reducing the length and steepness of a given slope, even a highly erodible soil may show little evidence of erosion. Long steep slopes should be broken by benching, or constructing diversion structures.

The natural vegetative cover is extremely important in controlling erosion since it: 1) shields the soil surface from the impact of falling rain; 2) increases infiltration of water into the soil; 3) reduces the velocity of the runoff water; and 4) holds soil particles in place while filtering surface runoff.

B. Keep disturbed areas small.

When earthwork is required and the natural vegetation is removed, keep the area and the duration of exposure to a minimum. Plan the phases or stages of development so that only the areas which are actively being developed are exposed. All other areas should have a good cover of temporary or permanent vegetation or mulch. Grading should be completed as soon as possible after it is begun. Minimizing grading of large or critical areas during the season of maximum erosion potential (May or October) reduces the risk of erosion.

C. Protect disturbed areas from storm water runoff.

This principle requires practices that control erosion on a site to prevent excessive sediment from being produced. Practices which keep soil covered as much as possible with temporary or permanent vegetation or with various mulch materials are best. Special grading methods such as roughening a slope on the contour or tracking with a cleated dozer may be used. Immediately after grading is complete, permanent vegetative cover should be established in the area. As cut slopes are made and as fill slopes are brought up to grade, these areas should be revegetated as the work progresses. Other practices include diversion structures to divert surface runoff from exposed soils and grade stabilization structures to control surface water.

Gross erosion in the form of gullies must be prevented by these control devices. Lesser types of erosion such as sheet and rill erosion should be prevented. When erosion is not adequately controlled, sediment control is more difficult and expensive.

D. Retain sediment within the site boundaries.

This principle relates to using practices that control sediment once it is produced and prevents it from leaving the site. Diversion ditches, sediment traps, vegetative filters, and sediment basins are examples of practices to control sediment. Vegetative and structural sediment control measures can be classified as either temporary or permanent depending on whether or not they will remain in use after development is complete. Generally, sediment can be retained by two methods: 1) filtering runoff as it flows through an area

and 2) impounding the sediment-laden runoff for a period of time so that the soil particles are deposited. The best way to control sediment, however, is to prevent erosion.

E. Implement a thorough maintenance and follow-up program.

This principle is vital to success. A site cannot be effectively controlled without thorough, periodic checks of the control practices. An example of applying this principal would be to start a routine "end-of-day check" to ensure all control practices are working properly.

These five principles are integrated into a system of vegetative and structural measures, along with management techniques, to develop a plan to prevent erosion and provide sediment control. In most cases, a combination of limited grading, limited time of exposure, and a judicious selection of erosion control practices and sediment-trapping facilities will prove to be the most practical method of controlling erosion and the associated production and transport of sediment.

After the development process begins, effective erosion and sedimentation control depends upon careful, accurate installation in a timely fashion, and sufficient maintenance to ensure the intended results.

9.2.3 The Sediment Control Plan.

The required Sediment Control Plan is a plan for controlling erosion and sediment during construction in compliance with the laws, ordinances, and these Standards. This plan shall be a part of the total site development plan and prescribes all the steps necessary, including scheduling, to assure erosion and sediment control during all phases of construction including final stabilization.

Planning for sediment control should begin with the conceptual plan and its preparation. Such features as soils and topography should be considered for the conceptual plan as well as any requirements for sediment control or storm water management.

Planning for sediment control should also begin with first-hand knowledge of the site by the designer. The plan shall be based on a sufficiently accurate topographic map that reflects the existing topography and site conditions. Adjacent areas affecting the site or affected by the site and its development shall be shown on the plans in sufficient detail to accomplish the need. Examples of this would be areas draining onto the site or areas where storm runoff leaves the site and travels to a stream or drainage system.

The Sediment Control Plan will consist of the best selection of erosion control practices and sediment-trapping facilities, in conjunction with an appropriate schedule, to accomplish an

adequate level of control. Particular attention must be given to concentrated flows of water, either to prevent its occurrence or to provide conveyance devices according to the Standards to prevent "major" or "gross" erosion. Sediment-trapping devices will usually be required at all pointes of egress of sediment-laden water. The plan must include permanent structures for conveying storm runoff, final site stabilization, removal of temporary sediment control features such as sediment basins, and finally, stabilization of the sites where temporary features were removed. Plans showing improvements or construction to be done outside the property line for the site will generally not be approved unless a plan is accompanied by an appropriate legal easement for the area in which the work is to be done.

The standardization of sediment control plans makes them easier to study and review. The List of Standard Symbols (Figure 2-1) was developed to facilitate plan review. The symbols should be bold and easily identifiable on the plans. Unless otherwise approved, one of the following scales shall be used for the detailed sediment control plans for urban development sites: 1″=20′, 1″=30′, 1″=40′, or 1″=50′. The contour interval for these plans shall be 2 feet or smaller.

The Sediment Control Plan shall include the existing and proposed topography. Existing topography can be either from actual field survey obtained from approved photogrammetric methods or from information obtained from responsible agencies. No proposed slopes will exceed 2H:1V. All slopes steeper than 3H:1V will require low-maintenance stabilization.

The existing and proposed improvements shall be shown on the sediment control plan and will include all buildings, roads, storm drains, etc. Proposed removal or alterations of existing facilities shall be indicated on the plan.

9.2.3.1 Sediment Control Practices.

All sediment control practices must be identified on the Sediment Control Plan. These practices will be shown in sufficient detail to facilitate implementation. All permanent sediment control structures will be labeled on the plan as PERMANENT. All temporary stabilization practices will be labeled on the plan as TEMPORARY. The location and methods of stabilization will be indicated on the Plan.

A schedule, or sequence, of operations will be included on the Sediment Control Plan. Special emphasis will be placed on the scheduled start of clearing and/or grading, sequence or installation of sediment control and storm water management facilities, duration or exposure, and the scheduled start and completion dates of stabilization measures (both temporary and permanent).

9.2.3.2 Drainage Plan.

A Drainage Plan shall be provided as per Section 1. Based on this Plan, indicate the velocity for: 1) pipe outfall, 2) outfall structure, and 3) natural or designed channel below outfall

structures to point to entry into existing system or natural stream. On the Sediment Control Plan show the proposed method of stabilizing the outfall, consistent with computed velocities.

9.2.4 Standards For Structural Practices.

This section describes several control measures which are available for use in controlling erosion and sedimentation. The designer is encouraged to review the Soil Conservation Service publications, Erosion and Sediment Control Guidelines in Developing Areas in Texas[4] and Texas Engineering Handbook Section 17, Erosion Control Practices[5] for additional control measures.

9.2.4.1 Straw Bale Barrier

Definition

A temporary barrier of straw or similar material may be used to intercept sediment laden runoff from small drainage areas of disturbed soil. Figure 9-2 is a typical straw bale barrier.

Purpose

The purpose of a straw bale barrier is to reduce velocity and effect deposition of the transported sediment load. Straw bale barriers are to be used to intercept and detain small amounts of sediment from unprotected areas of less than 1/2 acre.

Application

The straw bale barrier is used where:

A. Contributing area is approximately 1/2 acre, or less.

B. There is no concentration of water in a channel or other drainage way above the barrier.

C. Erosion would occur in the form of sheet or rill erosion.

D. Length of slope above the straw bale dike shall not exceed 100 feet.

Straw bales must not be used on high sediment producing areas above "high risk" areas, where water concentrates, or where there would be a possibility of a washout.

Design Criteria

A design is not required. All bales shall be placed on the contour and shall be either wire bound or nylon-string tied. Bales shall be laid with the cut edge adhering to the ground and staked in place. At least two wooden or metal stakes shall be driven through each bale and

into the ground at least one foot. The first stake shall be angled toward the previously placed bale and driven through both the first and second bale. Stakes shall be driven flush with the bale.

The possibility of piping failure shall be reduced by setting the straw bales in a trench excavated to a depth of at least four (4) inches and by firmly tamping the soil along the upstream face of the barrier.

9. 2.4.2 Silt Fence

Definition

A silt fence is a temporary barrier made of geotextile fabric which is water-permeable but will trap water-borne sediment from small drainage areas of disturbed soil, as shown in Figure 2-3.

Purpose

The purpose of a silt fence is to reduce runoff velocity and effect deposition of transported sediment load. Limits imposed by ultraviolet stability of the fabric will dictate the maximum period the silt fence may be used.

Application

A silt fence may be used subject to the following conditions:

A. Maximum allowable slope lengths contributing runoff to a silt fence are listed in the Table 9-1.

TABLE 9-1 Silt Fence Slope Criteria

Constructed Slope	Maximum Slope Length (feet)
2H:1V	25
2.5H:1V	50
3H:1V	75
3.5H:1V	100
4H:1V	125
Flatter than 5H:1V	200

B. Maximum drainage area for overland flow to a silt fence shall not exceed 0.5 acre per 100 feet of fence.

C. Erosion would occur in the form of sheet erosion.

D. There is no concentration of water flowing to the barrier.

Design Criteria

Design computations are not required for a silt fence design. All silt fences shall be placed as close to the contour as possible. The filter fence shall be placed and constructed in such a manner that runoff from a disturbed upland area shall be intercepted, the sediment trapped, and the surface runoff allowed to percolate through the structure. The bottom of the fabric should be buried in a 6 inch by 6 inch trench. When a trench cannot be constructed, rock and soil shall be placed over the bottom of the fabric in such a manner as to prevent underflow.

A detail of the silt fence shall be shown on the plan, and contain the following minimum requirements:

A. The type, size, and spacing of fence posts;

B. the size of woven wire support fence;

C. the type of filter cloth used;

D. the method of anchoring the filter cloth; and

E. the method of fastening the filter cloth to the fencing support.

Where ends of filter cloth join they shall be overlapped, folded and stapled to prevent sediment bypass.

A. Silt Fence Fabric

The fabric shall meet the specifications in Table 9-2. Type W fabric is a Type 1 self-supported fence. Type NW is a nonwoven fabric which is used in a Type 2 net-reinforced fence or Type 3 triangular filter dike. Either fabric may be manufactured from polyester, polypropylene or polyamide and shall be resistant to ultraviolet degradation, mildew or rot. The edges of woven fabric shall be sealed or salvaged to prevent raveling.

TABLE 9-2 Silt Fence Fabric Criteria

Fabric Properties	Minimum Acceptable Value		Test Method
	Type W	**Type NW**	
Tensile Strength, lb	100	90	ASTM D4632
Elongation at Yield, %	10-40	100 Max	ASTM D4632
Trapezoidal Tear, lb	50	35	ASTM D4533
Permittivity, 1/sec	0.1	1.0	ASTM D4491
Apparent Opening Size	20-50	50-80	ASTM D4751
Ultraviolet Stability, %	80	80	ASTM D4355

B. Fence Reinforcement Materials

Silt fence reinforcement shall be one of the following systems.

1. Type 1: Self-Supported Fence

This system consists of fence posts, spaced no more than 8 1/2 feet apart, and Type W fabric without net reinforcement. Fence posts shall be a minimum of 42 inches long, embedded at least 1 foot, and constructed of either wood or steel. Soft wood posts shall be at least 3 inches in diameter or nominal 2 x 4 inches and essentially straight. Hardwood posts shall have minimum dimensions of 1.5 x 1.5 inches. Fabric attachment may be by staples or locking plastic ties at least every 6 inches, or by sewn vertical pockets. Steel posts shall be T or L shaped with a minimum weight of 1.3 pounds per foot. Attachment shall be by pockets or by plastic ties if the posts have suitable projections.

2. Type 2: Net-Reinforced Fence

This system consists of fence posts, spaced no more than 8-1/2 feet apart, and Type NW fabric with an attached reinforcing net. Net reinforcement shall be galvanized welded wire mesh of at least 12.5-gauge wire with maximum opening size of 4 inches square. The fabric shall be attached to the top of the net by crimping or cord at least every 2-feet, or as otherwise specified.

3. Type 3: Triangular Filter Dike

This system consists of a rigid wire mesh, at least 6-gauge, formed into an equilateral triangle cross-sectional shape with sides measuring 18 inches, wrapped with Type NW silt fence fabric. The fabric shall be continuously wrapped around the dike, with a skirt extending at least 12 inches from its upslope corner.

C. Prefabricated Units

Envirofence or approved equal may be used in lieu of the above method providing the unit is installed per manufacturer's instructions.

9. 2.4.3 Stabilized Construction Entrance

Definition

A stabilized pad of aggregate located at any point where traffic will be entering or leaving a construction site to or from a public right-of-way, street, alley, sidewalk, or parking area.

Purpose

The purpose of a stabilized construction entrance is to reduce or eliminate the tracking or flowing of sediment onto public rights-of-way or streets.

Application

A stabilized construction entrance applies to all points of construction ingress and egress.

Design Criteria

A design is not required for a stabilized construction entrance, however, the following criteria in Table 9-3 shall be used.

TABLE 9-3 Stabilized Construction Entrance Design Criteria

Aggregate:	Use 2 inch stone, or reclaimed or recycled concrete equivalent
Thickness:	Not less than six (6) inches
Width:	Not less than full width of all points of ingress and egress Twenty (20) foot minimum
Length:	As required, but not less than 50 feet

Maintenance

The entrance shall be maintained in a condition which will prevent tracking or flowing of sediment onto public rights-of-way or streets. This may require periodic top dressing with additional aggregate as conditions demand. All sediment spilled, dropped, washed, or tracked onto public rights-of-way must be removed immediately.

When necessary, wheels must be cleaned to remove sediment prior to entrance onto public right-of- way. When washing is required, it shall be done on an area stabilized with crushed stone which drains into an approved sediment trapping device. All sediment shall be prevented from entering any storm drain, ditch, or watercourse.

9.2.4.4 Sediment Basin

Definition

A sediment basin is constructed across a waterway or at other suitable locations to collect and store debris or sediment.

Purpose

The purpose of a sediment basin is to preserve the capacity of reservoirs, ditches, canals, diversions, waterways, and streams; to prevent undesirable deposition on bottom lands and developed areas; to trap sediment originating from construction sites; and to reduce or abate pollution by providing basins for deposition and storage of silt, sand, gravel, stone, agricultural wastes, and other detritus.

Application

This practice applies where physical conditions, land ownership or other restrictions preclude the treatment of a sediment source by the installation of erosion-control measures to keep soil and other material in place, or where a sediment basin offers the most practical solution to the problem.

Design Criteria

A. Compliance with Laws and Regulations

Design and construction shall comply with state and local laws, ordinances, rules, and regulations. The designer is cautioned that water impounding structures higher than six (6) feet may be considered dams and is encouraged to contact the Texas Natural Resource Conservation Commission regarding applicable rules.

B. Location

The sediment basin should be located to obtain the maximum storage benefit from the terrain and for ease of cleanout of the trapped sediment. It should be located to minimize interference with construction activities and construction of utilities.

C. Size of the Basin

The capacity of the sediment basin, as measured from the bottom of the basin to the elevation of the crest of the principal spillway, shall equal or exceed the trapped volumes of debris or sediment expected to be trapped at the site during the planned useful life of the structures or improvements it is designed to protect. The minimum capacity provided shall be in accordance with criteria in Texas Engineering Handbook, Erosion Control Practices, Section 17[5]

The Universal Soil Loss Equation (USLE) can be used to determine the size of the sediment basin. The USLE determines the gross sheet and rill erosion (tons/ac./yr). The actual sediment yield at the point of concern (sediment basin) is the gross erosion minus the sediment deposited enroute. The ratio of sediment yield to gross erosion can be estimated from relationships discussed in the SCS publication NEH-Chapter 3, Sedimentation.

The USLE equation is defined by six (6) factors. The designer should consult the Soil Conservation Service's Technical Release No. 51[1] and USDA Handbook No. 537, for the proper tables and figures. The Universal Soil Loss Equation is defined by Equation 2-1.

$$A = RKLSCP \qquad (2\text{-}1)$$

where:

A = sediment yield, in tons per acre per year

R	=	rainfall factor, R = 300 for Temple, Texas
K	=	soil erodibility factor, 0.05 = K = 0.41
L	=	slope length factor
S	=	slope gradient factor
C	=	cropping management factor, 0.001 = C = 0.99
P	=	erosion control practice factor, 0.10 = P = 1.0

Sediment basins shall be cleaned out when the capacity as described above is reduced by sedimentation to 60% full, except in no case shall the sediment level by permitted to build up higher than one (1) foot below the principal spillway crest. At this elevation, cleanout shall be performed to restore the original design volume to the sediment basin. The elevation corresponding to the maximum allowable level shall be determined and shall be stated in the design data as a distance below the top of the riser and shall be clearly marked on the riser.

The basin dimensions necessary to obtain the required basin volume as stated above shall be clearly shown on the plans to facilitate plan review, construction, and inspection.

The Sediment Basin Plan shall indicate the method(s) of disposing of the sediment removed from the basin. The sediment shall be placed in such a manner that it will not erode from the site. The sediment shall not be deposited downstream from the basin or adjacent to a stream or floodplain.

The sediment basin plans shall also show the method of disposing of the sediment basin after the drainage area is stabilized, and shall include the stabilizing of the sediment basin site. Water lying over the trapped sediment shall be removed from the basin by pumping, cutting the top of the riser, or other appropriate methods prior to removing or breaching the embankment. Sediment shall not be allowed to flush into the stream or drainageway.

D. Entrance of Runoff into Basin

Points of entrance of surface runoff into excavated sediment basins shall be protected to prevent erosion. Diversions, grade stabilization structures or

other water control devices shall be installed as necessary to ensure direction of runoff and protect points of entry into the basin.

E. Principal Spillways

A pipe spillway is recommended on all basins. The pipe spillway shall consist of a vertical pipe riser or box riser joined to a conduit which will extend through the embankment and outlet below the downstream toe of the fill.

The pipe spillway shall be proportioned to convey not less than 0.2 cfs per acre of drainage area without causing flow through the emergency spillway. The minimum size pipe shall be 4 inches in diameter. The vertical pipe riser or box riser shall have a cross-sectional area at least 1.5 times that of the pipe.

One anti-seep collar shall be installed around the pipe when any of the following condition exist:

1. The settled height of the dam exceeds 15 feet;

2. the conduit is of smooth pipe larger than 8 inches in diameter; or,

3. the conduit is of corrugated metal pipe larger than 12 inches in diameter.

The anti-seep collars and their connection to the pipe shall be watertight. Protection against scour at the discharge end of the spillway shall be provided. Trash racks shall be installed where needed.

F. Earth Emergency Spillways

All debris basins shall have an earth emergency spillway unless the peak flow from the major storm is carried through a pipe spillway or other mechanical spillway. The earth spillway shall be excavated in undisturbed earth or compacted fill. The spillway shall be designed to be stable for the major storm flow.

Peak discharges for design of the emergency spillway shall be computed using an accepted method and shall be based on the soil and anticipated cover conditions in the drainage area during the expected life of the structure.

The crest of the emergency spillway shall be at least 0.5 feet above the crest of the principal spillway. For debris basins, the combined capacities of pipe and

emergency spillways shall be sufficient to convey the peak discharge from the major storm. The top of a dam for all debris basins shall be at least 0.5 feet higher than the stage reached by the major storm.

The crest elevation of the emergency spillway will be determined by the head required on the principal spillway. The minimum top width shall be as per Table 9-4.

TABLE 9-4 Minimum Top Width Embankment (Earth Fill)

Height of Dam	Top Width
10 feet or less	6 feet
10-14	8 feet
14-20	9 feet

Source: Soil Conservation Services Erosion and Sediment Control Guidelines for Developing Areas in Texas.[4]

G. Safety

Sediment basins are attractive to children and can be very dangerous. Therefore they shall be fenced or otherwise secured unless this is deemed unnecessary due to the remoteness of the site or other circumstances. In any case, local ordinances and regulations regarding health and safety must be adhered to.

9. 2.4.5 Diversion

Definition

A drainageway of parabolic or trapezoidal cross section that is constructed across the slope, perpendicular to the direction of flow. The drainageway should be equipped with a supporting ridge on the lower side.

Purpose

The purpose of a diversion is to intercept and convey runoff to stable outlets at non-erosive velocities. Temporary diversions are installed as an interior measure to facilitate some phase of construction and usually have a life expectancy of 1 year or less. A permanent diversion is an integral part of an overall water disposal system and remains for protection of property.

Application

Diversions are used where:

A. Runoff from higher areas is or has potential for damaging properties causing erosion or interfering or preventing the establishment of vegetation on lower areas.

B. Surface and shallow subsurface flow caused by seepage is damaging sloping upland.

C. The length of slopes need to be reduced so that soil loss will be kept to a minimum.

D. Required as a part of a pollution abatement system.

E. To control erosion and runoff on urban or developing areas and construction sites.

Design Criteria

The design procedures for trapezoidal channels are provided in Section 6 of the City of Temple Drainage Criteria and Design Manual.

A. Location

Diversion location shall be determined by considering outlet conditions, topography, land use, soil type, length of slope, and the layout of the proposed development. Avoid locations in or immediately below unstable or highly erosive soils, unless special treatment or stabilization measures are previously applied.

B. Capacity

Peak runoff values used in determining the capacity requirements shall be determined as outlined in Section 2 of the City of Temple Drainage Criteria and Design Manual. The minimum design 24-hour storm frequencies and freeboard shall comply with criteria in Table 9-5.

Diversions designed to protect urban area, buildings and roads, and those designed to function in connection with other structures, shall have enough capacity to carry the peak runoff expected from a storm frequency consistent with the hazard involved.

TABLE 9-5 Diversion Frequency and Freeboard

Diversion Type	Typical Areas of Protection	Design Frequency (Years)	Freeboard Required (Feet)
Temporary	Construction roads; land areas, etc.	2	0.0
	Building Sites	5	0.0
Permanent	Land areas; playfields, recreation areas, etc.	25	0.3
	Homes, schools, industrial bldg., etc.	50	0.5

Source: Soil Conservation Service, Erosion and Sediment Control Guidelines for Developing Areas in Texas.[4]

C. Velocity and Grade

Channel grades may be uniform or variable. Maximum permissible velocities of flow for the stated conditions of stabilization are shown in Tables 9-6 and 9-7.

TABLE 9-6 Selection of Vegetal Retardance

Average Length of Vegetation (inches)	Retardance	
	Good Stand	Fair Stand
11-24	B	C
6-10	C	D
2-6	D	D

Source: Soil Conservation Service, Erosion and Sediment Control Guidelines for Developing Areas in Texas.[4]

TABLE 9-7 Permissible Velocities

Soil Texture	Bare Channel	Permissible Velocity (fps) Channel Vegetation			
		Retardance	Poor	Fair	Good
Sand, silt		B		3.0	4.0
Sandy loam	1.5	C	1.5	2.5	3.5
Silty loam		D		2.0	3.0
Silty clay loam		B		4.0	5.0
Sandy clay loam	2.0	C	2.5	3.5	4.5
		D		3.0	4.0
Clay		B		5.0	6.0
	2.5	C	3.0	4.5	5.5
		D		4.0	5.0

Source: Soil Conservation Service, Erosion and Sediment Control Guidelines for Developing Areas in Texas.[4]

D. Cross Section

The channel may be parabolic, V-shaped or trapezoidal in shape. The diversion is to be designed to have stable side slopes. The side slopes for permanent diversions should not be steeper than 3H:1V for maintenance purposes and preferably 4H:1V. The back slope of the ridge is not to be steeper than 3H:1V and preferably 4H:1V. In determining the cross section on temporary diversions, consideration should be given to soil type, frequency and type of equipment that is anticipated to be crossing the diversion. In no case should side slopes be steeper than 1H:1V.

E. Outlets

Each diversion must have an adequate outlet. The outlet may be a grassed waterway, vegetated or paved area, grade stabilization structure, stable watercourse, or tile outlet. In all cases the outlet must convey runoff to a point where outflow will not cause damage. Vegetative outlets shall be installed prior to, and have vegetation established before diversion construction.

Underground outlets consist of an inlet and underground conduit, and the release rate when combined with storage is to be such that the design storms will not encroach on the design freeboard of the diversion ridge.

All areas where vegetation has been disturbed during construction and all other earth construction where vegetation is included in design, shall be seeded following completion of construction.

9. 2.4.6 Grassed Waterway or Outlet

Definition

A natural or man-made drainageway or parabolic or trapezoidal cross section that is below adjacent ground level and is stabilized by suitable vegetation for the safe disposal of runoff or water.

Purpose

The purpose of a grassed waterway or outlet is to convey runoff from terraces, diversions, or from natural concentrations without causing damage from erosion or flooding.

Application

Grass waterways and outlets are used on sites where added capacity or vegetative protection, or both, are required to control erosion resulting from concentrated runoff. In short reaches of the grassed waterways or outlet where vegetation is not suitable for non-erosive disposal of runoff, other linings may be used to control erosion.

Grassed waterways are used where added channel capacity or stabilization is required to control erosion resulting from concentrated runoff and where such control can be achieved by this practice along or in combination with others.

Design Criteria

A. Compliance with Laws and Regulations

Planning and construction shall be in compliance with state and local laws and regulations. Such compliance is the responsibility of the landowner or developer.

B. Capacity

The minimum capacity is to be that required as stated in Section 6 of the City of Temple Drainage Criteria and Design Manual for open channels. Channel dimensions may be determined from Section 6.

C. Velocity

The design velocity is to be based upon soil, duration of flow, and type and quantity of vegetation. The maximum design velocity should be 4.0 feet per second for vegetation established by seeding and 6.0 feet per second for that established by sodding.

D. Cross Section

The cross section may be parabolic, trapezoidal, or triangular in shape. The bottom width of trapezoidal waterways or outlets shall not exceed 100 feet unless multiple or divided waterways are provided to control meandering of low flows.

The minimum depth of a waterway receiving water from diversions or tributary channels is to be that required to keep the design water surface in the waterway or outlet at or below the design water surface elevation in the diversion or other tributary channel at their junction. To provide for loss in channel capacity due to vegetal matter accumulation, sedimentation, and normal seedbed preparation, the channel depth and width should be increased proportionally to maintain the hydraulic properties of the waterway. In parabolic channels, this may be accomplished by adding 0.3 foot to the depth and 2 feet to the top width of the channel. This is not required on waterways located in natural watercourses.

Where a paved bottom is used in combination with vegetated side slopes, the paved section is to be designed to handle the base flow or runoff from a one-year frequency storm, whichever is greater. The flow depth of the paved section shall be a minimum of 0.5 foot.

E. Outlets

Each waterway shall have a stable outlet. The outlet may be another waterway, a stabilized open channel, or a grade stabilization structure.

In all cases, the outlet must discharge in such a manner as not to cause erosion. Outlets shall be constructed and stabilized prior to the operation of the waterway.

F. Drainage

In areas with high water table, seepage problems or prolonged low flows, the designer shall provide for a subsurface drain, lined pilot channel, or other subsurface drainage methods. An open joint storm drain or lined pilot channel may be used to serve the same purpose and also handle frequently occurring storm runoff, base flow, or prolonged flow. The storm drain should be designed to handle base flow or the runoff from a one-year frequency storm, whichever is greater.

9. 2.4.7 Lined Waterway or Outlet

Definition

A waterway or outlet with an erosion resistant lining of concrete, stone, or other permanent material. The lined section extends up the side slopes to designed depth. The earth above the permanent lining may be vegetated or otherwise protected.

Purpose

The purpose of a lined waterway or outlet is to provide for safe disposal of runoff from other conservation structures or from natural concentrations of flow, without damage by erosion or flooding, in situations where lined or grassed waterways would be inadequate. Properly designed linings may also control seepage, piping, and sloughing or slides.

Application

This practice applies where the following or similar conditions exist.

A. Concentrated runoff is such that lining is required to control erosion.

B. Steep grades, wetness due to prolonged base flow, seepage, or piping would cause erosion.

C. The location is such that damage from use by people or animals preclude use of vegetated waterways or outlets.

D. High value property or adjacent facilities warrant the extra cost to contain design runoff in a limited space.

E. Soils are highly erosive or other soil or climatic conditions preclude using vegetation.

Design Criteria

A. Capacity

The minimum capacity shall be adequate to carry the peak rate of runoff. Capacity shall be computed using Manning's formula.

B. Velocity

Maximum design velocity shall be as stated in Section 6.0 for the appropriate channel type. Velocities exceeding critical velocity will be restricted to straight reaches. Waterways or outlets with velocities exceeding critical velocity shall discharge into an energy dissipator to reduce velocity to less than critical.

C. Cross Section

The cross section shall be triangular, parabolic, or trapezoidal. Monolithic concrete may be rectangular.

D. Freeboard

The minimum freeboard for lined waterways shall be as stated in Section 6 for the appropriate channel type.

E. Side Slopes

Steepest permissible side slopes shall be according to Table 9-8.

TABLE 9-8 Permissible Side Slopes for Lined Waterway

Non-Reinforced Concrete	Permissible Side Slope
Hand-placed, formed concrete:	
Height of lining 1.5 feet or less	Vertical
Hand-placed, screened concrete or in-place mortared flagstone:	
Height of lining less than 2 feet	1H:1V
Height of lining more than 2 feet	2H:1V
Slip form concrete:	
Height of lining less than 3 feet	1H:1V
Rock Riprap	2H:1V

F. Lining Thickness

Minimum lining thickness shall be as follows:

Concrete - 4 inches

Rock riprap - maximum stone size plus thickness of filter or bedding

Flagstone - 4 inches including mortar bed

G. Filters or Bedding

Filters or bedding are utilized to prevent piping. Drains shall be used to reduce uplift pressure, and to collect water as required. Filters, bedding, and drains shall be designed in accordance with Soil Conservation Service Standards. Weep holes and drains will be provided as needed.

H. Concrete

Concrete used for lining shall be so proportioned that it is plastic enough for thorough consolidation and stiff enough to stay in place on side slopes. A dense durable product will be required.

9. 2.4.8 Riprap

Definition

A layer of loose rock or aggregate placed over an erodible soil surface.

Purpose

The purpose of riprap is to protect the soil surface from the erosive forces of water.

Application

This practice applies to soil-water interfaces where the soil conditions, water turbulence and velocity, expected vegetative cover, and groundwater conditions are such that the soil may erode under the design flow conditions. Riprap may be used, as appropriate, at such places as storm drain outlets, channel banks and/or bottoms, roadside ditches, drop structures, and shorelines. Broken concrete is not suitable as riprap.

Design Criteria

The minimum design discharge for channels and ditches shall be the peak discharge. See Section 6 of the City of Temple Drainage Criteria and Design Manual for further design criteria.

9. 2.5 Standards For Vegetative Practices For Critical Area Stabilization

Definition

Critical area stabilization is planting short-term vegetation on critical areas.

Purpose

The purpose of critical area planting is to stabilize the soil, reduce damage from sediment and runoff to downstream areas, improve wildlife habitat, and enhance beauty of the area.

Application

Critical area stabilization is used on sediment-producing, highly erodible or severely eroded areas, such as dikes, levees, cuts, fills, and denuded or gullied areas where vegetation is difficult to establish with usual seeding or planting methods.

Design Criteria

A. Site Preparation

1. If necessary, divert outside water away from the critical area. This may require a permanent diversion, or in other instances, a temporary measure that will be effective during the period of establishment.

2. Where practical, grade to permit use of conventional equipment for seedbed preparation, seeding, mulch application and anchoring. (Cabling of equipment may be necessary on steep slopes.)

3. On construction sites where the exposed and underlying soil material will not maintain adequate vegetation, a topsoil dressing of six (6) inches will be applied as part of construction.

4. Where slopes must be steeper than 2H:1V use some means other than vegetation to stabilize the slope.

B. Seedbed Preparation

1. The seedbed, immediately before seeding, shall be firm but not so compact as to prohibit covering the seed. Tillage implements shall be used as necessary to provide approximately a three (3) inch depth of firm but friable soil that is free of large clods.

2. If fertilizer is to be applied, work this in during final seedbed preparation.

C. Fertilizing

1. Unless soil fertility is known to be adequate, refer to the City of Temple for appropriate fertilizer application rates.

D. Seeding

1. Method of Seeding

The proper amount of seed must be evenly distributed, placed at the proper depth (1" or less), and packed so that the seed is in contact with the soil. This may be done by one of the following methods.

a. Drilling

Drilling is the preferred method and should be used when possible. Drill must be equipped with seed hoppers that will properly meter out the kind of seed being planted. This may require a special drill for fluffy seeds. The drill should have double disk furrow openers with depth bands to obtain proper depth of placement. The drill should be equipped with packer wheels or the seeded area should be packed with a land roller immediately after drilling.

b. Broadcasting

This method is to be used only on areas that are inaccessible to a grass drill. The seeding rates shall be increased by one and one half (1-1/2) times when the seed is broadcasted. Seed must be evenly distributed. The seed must be covered and this can be done by light dicing, cultipacking, harrowing or raking by hand. If at all possible, the seeded area should then be packed.

c. Hydro-seeding

Where hydro-seeding equipment is used, seed, fertilizer, and wood-fiber mulch materials are mixed into a slurry with water. Care should be used to spread the mixture evenly and soon after the mixture is made. Keep the mixture well agitated when seeding.

E. Mulching

1. Where to Use

Mulch is essential on critical areas and slopes greater than 3H:1V. Mulch should be used on all treated critical areas where the goal is to attain a grass stand as soon as possible and where there is danger of damaging erosion occurring during the period of establishment.

2. Material

Mulch shall consist of clean cereal grain straw, grass hay, wood chips, long fibered wood cellulose or gravel.

3. Rate

Mulch shall be applied uniformly at a rate of 3,000 pounds minimum to 4,000 pounds maximum per acre of hay or straw. For long fibered wood cellulose the rate will be 1,500 pounds minimum to 2,500 maximum per acre.

4. Anchoring

a. Anchor mulch with a dull disk or other suitable machine. The operation should be across the slope. The mulch should be anchored a minimum of two inches in the soil and the disks spaced not more than 12 inches apart. Where it is impossible to use such a machine the mulch should be anchored by hand with a square point spade.

b. In some cases, properly anchored mulch netting may be used to hold the mulch in place.

9. 2.6 Bibliography

1. Soil Conservation Service, US Department of Agriculture, Technical Release No. 51 Procedure for Computing Sheet and Rill Erosion on Project Areas, US Government Printing Office, Washington, D.C., September 1977.

2. Environmental Protection Agency, Storm Water Pollution Prevention for Construction Activities, April, 1992.

3. Pitt, Robert and Roger Bannermann, Management Alternatives for Urban Stormwater, EPA/et. al. Nonpoint Pollution Abatement Symposium, pp. TIIH 1 - TIIH 16, April 1985.

4. Soil Conservation Service, Erosion and Sediment Control Guidelines in Developing Areas in Texas, 1976.

5. Soil Conservation Service, Texas Engineering Handbook, Section 17, Erosion Control Practices.

9.3 POST CONSTRUCTION (PERMANENT) BEST MANAGEMENT PRACTICES

9. 3.1 Required Permanent BMPs. To preserve the existing natural resources in Temple and promote sustainable development, demonstration of compliance with the following permanent BMPs, where applicable, are required in the SWMP of all land disturbing activities.

9. 3.1.1 Site Layout.

Each SWMP is required to show the site layout as well as the placement of the selected BMPs.

9. 3.1.2 Creek Buffer Zone.

All property located on or adjacent to a natural, vegetated, earthen or grass lined creek, waterway, stream, or channel is hereby deemed to be within a creek buffer zone. When a property is located within a creek buffer zone, the developer, builder, or owner must comply with the techniques found within this manual.

9. 3.1.2a Establishment of Creek Buffer Zones

The city code establishes that all property located on or adjacent to a natural, vegetated, earthen or grass lined creek, waterway, stream, or channel is deemed to be within a creek buffer zone (CBZ); and shall comply with the DCDM and SWBMPM. For definitions of most terms used in this design criteria refer to the city code.

The following are four methods of establishing creek buffer zones (CBZ):

1. Method A - Property outside of FEMA Mapped Floodplain
2. Method B - Property located inside FEMA Zone AE
3. Method C - Property located inside FEMA Zone AE and Floodway
4. Method D - Property located inside FEMA Zone A

Method A – Property outside of FEMA Mapped Floodplain.

a. Includes all property located outside FEMA mapped flood plain.
b. Requirements:
   i. None,
   ii. Unless property is adjacent to or encompasses a crest of slope steeper than the ratio shown in Figure 1.

Method B – Property located inside FEMA Zone AE.

a. Includes all property located inside of FEMA Zone AE.

b. Requirements:
   i. Chapter 13 Flood Damage Prevention Ordinance applies,
   ii. Flood plain development permit required,
   iii. If encroachment into floodway is proposed see Zone C, and
   iv. If adjacent to or encompasses a crest of slope steeper than the ratio shown in Figure 1.

Method C – Property located inside FEMA Zone AE and Floodway.

a. Includes all property located inside of FEMA Zone AE and Floodway.
b. Requirements:
   i. Chapter 13 Flood Damage Prevention Ordinance applies,
   ii. Flood plain development permit required,
   iii. Engineering study required,
   iv. No rise certificate,
   v. Letter of map change required, and
   vi. If adjacent to or encompasses a crest of slope steeper than the ratio shown in Figure 1.

Method D – Property located inside FEMA Zone A.

a. Includes all property located inside of FEMA Zone A.
b. Requirements:
   i. Chapter 13 Flood Damage Prevention Ordinance applies,
   ii. Flood plain development permit required,
   iii. Engineering study required, and
   iv. If adjacent to or encompasses a crest of slope steeper than the ratio shown in Figure 1.

9. 3.1.2b Creek Buffer Zone Restrictions

a. Occupied Structures. No occupied structure shall be allowed in CBZ; unless engineered by a professional engineer and approved by the City, or existing at the time of passage of the ordinance.
b. Private amenity structures or private amenities. Property owners with private amenity structures or private amenities assume responsibility for all risks associated with erosion, including but not limited to full replacement cost if loss or damage occurs due to active erosion. City assumes no responsibility for loss or damage to private amenities or private amenity structures that may occur from creek erosion.

9. 3.1.2c Design Standards for Creek Buffer Zones

Creek Buffer Zones must be designed and designated by the requirements and standards found in the city code and this manual.

9. 3.1.2d Creek Buffer Zone Designation Requirements

a. Preliminary plats, final plats, plans, construction and building permit applications must clearly show the limits of creek buffer zones based on criteria in this chapter.
b. The limits must be indicated by dashed lines and labeled "Creek Buffer Zone."
c. Creek Buffer Zone designation may be combined with other lines in cases where erosion hazard zone lines coincide with flood plain limits or other public utility easements, such as drainage easements.
d. Properties next to natural or constructed channels with a minimum of the ratio found in Figure1 or flatter side slopes are not required to comply with these erosion hazard zone criteria unless, in the opinion of a licensed professional engineer, erosion hazard zone delineation is warranted. Creek Buffer Zones may not apply to waterways that have been engineered to convey a 1% chance storm (100-year frequency storm) and to withstand erosive forces or that have been adequately stabilized by manmade construction materials such as concrete rip-rap and concrete retaining walls. Wood timbers ties shall not be considered to adequately stabilize waterways due to their relatively short life span of service.

9. 3.1.2e Licensed Professional Engineer's Responsibilities

a. It is the licensed professional engineer's responsibility to adhere to these criteria when preparing preliminary plats, plans or building permit applications.
b. The licensed professional engineer shall recognize these criteria as the minimum standards such that unique or site specific geological, topographical, or other factors may require detailed study during design. Adjustments from these minimum standards are allowed based on the findings from engineering analysis and engineering judgment.
c. It is the licensed professional engineer's responsibility for determining and providing creek buffer zones delineation on preliminary plats, final plats, plans, construction and building permit applications based on engineering judgment and best practices.

Figure 1. Creek Buffer Zone Design Standard

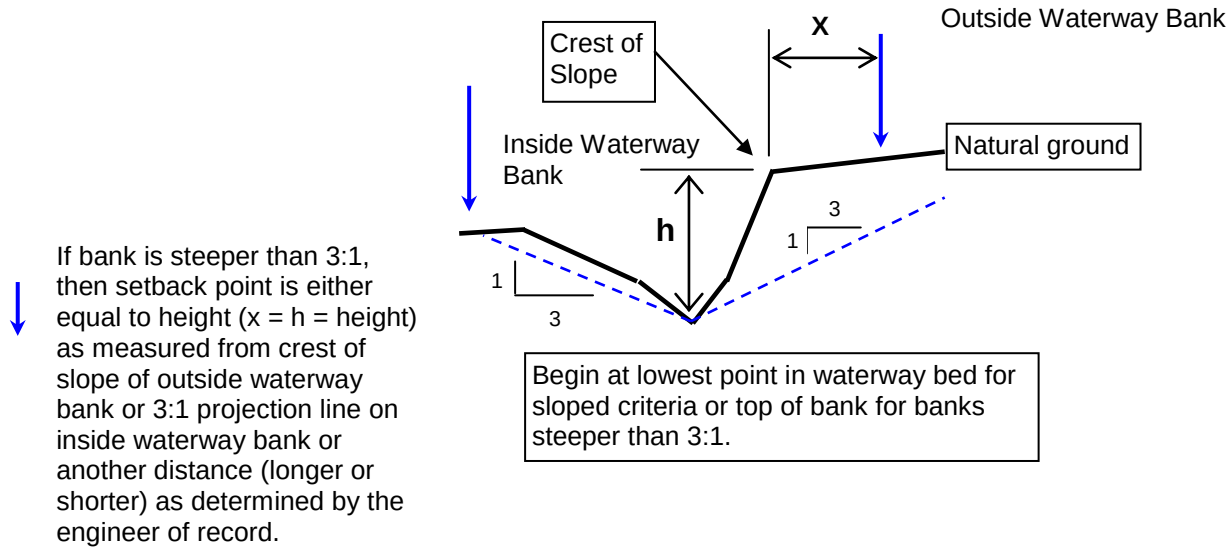

9.3.2 Required Permanent BMP Credit Point Requirements. In addition to the required BMPs, the following number of BMPs shall be provided based on the size of the project:

Table 9-9: Additional BMP Requirements

Non-Residential	
	Number of additional BMP Credits required
1 acre ≤ Disturbed Area < 5 acres	1
5 acres ≤ Disturbed Area < 10 acres	2
10 acres ≤ Disturbed Area < 20 acres	3
≥ 20 acres	4

Residential	
	Number of additional BMP Credits required
1 acre ≤ Disturbed Area < 5 acres	1
5 acres ≤ Disturbed Area < 20 acres	2
≥ 20 acres	3

Table 9-10 lists additional BMPs, basic requirements and the associated credits received for application of each BMP.

Table 9-10 - Best Management Practices Design Criteria

BMP	Requirements	BMP Credits	Relative Cost
Site Layout	**Required with each Storm Water Management Plan per ordinance.**	**Required**	
Creek Buffer Zone	**Required with each development adjacent to natural creek, waterway, channel per ordinance.**	**Required - where applicable**	
Additional BMPs	**Required to meet based on land disturbance area per ordiance.**		
1. Vegetated Swales	100' Min. Length; trapezoidal section 0.5% Min. Channel Slope, 2.5% Max. Channel Slope; maximum 2 fps for 2-yr storm Max. 3:1 Side Slopes 80% Min. Vegetative Cover	1	$
2. Vegetated Filter Strips	20' Min. Width, 72' Roadway Max. Width 20% Max. Slopes 1 ft/sec max. flow velocity for 1-year storm 80% Min. Vegetative Cover Min. 6" grass height	1	$
3. Permeable & Semi-Pervious Pavement	Max. drainage area 50 acres Vegetative buffers or sediment traps around edges to prevent clogging of pavement pores Locate away from heavy traffic areas	1	$$$
4. Roof Drain Discharge to Pervious Surface	Discharge to Vegetated Swale, Vegetated Filter Strip or retention facility	1	$$
5. Extended Detention Basins	Oversize volume by 20% to account for sed. or first 1/2" of runoff, whichever less Ratio of flowpath length to width min. 2:1 (L:W) Optimal depth 2 to 5 feet No more than 50% drawdown within first 24 hours Complete drawdown within 48 hours Treats up to 25-year storm event with ability to pass 100-year storm event	3	$$$$
6. Retention Ponds	Pond volume sufficient to capture & hold the design runoff Max. 3:1 Side Slopes Bypass structure capable of passing 100-year storm Empty Pond within 72 hours (infiltration, irrigation, or evapo-transpiration Rock riprap at inlet to pond 15' public access easement around pond Min. 1 access point into pond with max. 5:1 slope Remove sediment from pond once accumulation reaches 6-inches	3	$$$$
7. Detention Pond Outlet for Erosion Protection and Storm Water Quality Benefits	post-dev flows < pre-dev flows for the 1, 2, 5, 10 & 100 Yr Storm Events Complete drawdown within 72 hours	1	$$

Table 9-10 - Best Management Practices Design Criteria

BMP	Requirements	BMP Credits	Relative Cost
Site Layout	**Required with each Storm Water Management Plan per ordinance.**	**Required**	
Creek Buffer Zone	**Required with each development adjacent to natural creek, waterway, channel per ordinance.**	**Required - where applicable**	
8. Subsurface Treatment Devices	HS-20 Structural Design Treat 75-90% Annual rainfall runoff Remove 50-80% TSS Remove 90% floatable free oil Perform maintenance when stored volume reaches 15% of total capacity	2	$$
9. Landscaping	Document plant species to be used and maintenance schedule Details of maintenance schedule including amount, types and frequency of chemical use Must demonstrate impervious cover runoff interception and water quality treatment benefit	1	$$
10. Cluster Design	Reserve 12.5%-25.49% of available land on parcel as conservation area Reserve 25.5%-32.49% of available land on parcel as conservation area Reserve >32.5% of available land on parcel as conservation area	1 2 3	$$$
11. Preservation of Existing Tree Canopy	Min. Tree Height 6', Min. Caliper 2" (new trees), 4" (existing trees) Existing or new tree canopy shall be no greater than 25' from impervious ground surfaces to receive credit 25%-49.9% of existing canopy covering 50% or more of site 50%-65% of existing canopy covering 50% or more of site >66% of existing canopy covering 50% or more of site	1 1 2 3	$$
12. Other BMPs	Consider: bioretention, low impact development techniques, floatable exclusion systems, etc	TBD	Varies

9.3.3 Additional BMPs. The following items are acceptable permanent BMPs to be utilized when meeting the requirements of Table 1 and Table 2 based on the size of the land disturbing activity and complying with DCDM and this manual.

1. Vegetated swales.
2. Vegetated filter strips.
3. Permeable and semi-pervious pavement.
4. Discharge of roof drains to pervious surface.
5. Extended detention basins for storm water quality benefits.
6. Retention ponds.
7. Detention pond outlet for erosion protection and storm water quality benefits.
8. Subsurface treatment devices.
9. Landscaping.
10. Cluster design.
11. Preservation of existing tree canopy.
12. Other BMPs. Other BMPs and innovative designs will be considered when submitted to the City Engineer with supporting calculations and references.

9.3.3.1 Vegetated Swales.

Definition

Vegetated swales are sloped, vegetated channels or ditches that provide both conveyance and water quality treatment of storm water runoff.

Design Criteria

Vegetated swales shall be designed to have a hydraulic residence time of at least five (5) minutes for the storm flow to be treated. Below are additional design parameters which must be followed for the development of vegetated swales.

1. Minimum bottom width = 6-feet
2. Maximum bottom width = 10-feet
3. Minimum channel slope = 0.5%
4. Maximum channel slope = 2.5%
5. Maximum side slope = 3H:1V
6. Minimum vegetative cover = 80%
7. Minimum swale length = Channel velocity (ft/s) x 300 (s)

The channel velocity is calculated by dividing the peak flow rate from a storm producing a constant rainfall rate of 1.1-inch/hour by the cross-sectional area of the swale. The depth of flow in the swale shall not exceed 4-inches in a 1.1-inch/hour storm. Trapezoidal shapes are generally used for channel cross-sections, although the geometry of the channel is not critical

as long as a broad, relatively flat bottom is provided. Roadside ditches should be regarded as significant potential swale/buffer strip sites and should be utilized for this purpose whenever possible. If flow is to be introduced through curb cuts, pavement should be placed slightly above the elevation of the vegetated areas and curb cuts should be at least 12-inches wide to prevent clogging.

Maintenance

Maintenance requirements typically include activities such as irrigation, mowing, trimming, removal of invasive species, and replanting when necessary.

9.3.3.2 Vegetated Filter Strips.

Definition

Filter strips may be natural or engineered. The use of natural filter strips is limited to perimeter lots and other areas that will not drain by gravity to other BMPs on the site.

Design Criteria

Natural filter strips should extend along the entire length of the contributing area. The slope should not exceed 10%. The minimum dimension in the direction of flow for natural filter strips should be 50-feet. All of the filter strip should lie above the elevation of the 2-year, 3-hour storm of any adjacent drainage. There is no requirement for vegetation density or type.

Engineered filter strips incorporate many of the general criteria of swale design. Vegetated roadside shoulders provide one of the best opportunities for incorporating filter strips into roadway and highway design. The design goal is to produce uniform, shallow overland flow across the entire filter strip. Landscaping on residential lots is not considered to function as a vegetated filter strip because fertilizers and pesticides are commonly applied in these areas. Below is additional design criteria for engineered filter strips.

1. Maximum width in the direction of flow of the contributing impervious area = 72-feet
2. Minimum length of the filter strip in the direction of flow = 15-feet
3. Maximum slope = 20%
4. Minimum vegetative cover = 80%

The area contributing runoff to a filter strip should be relatively flat so that the runoff is distributed evenly to the vegetated area without the use of a level spreader. The area to be used for the strip should be free of gullies or rills that can concentrate overland flow. The top edge of the filter strip should be slightly lower than the pavement surface to ensure drainage

off the pavement to the filter strip. Filter strips should be established after other portions of the project are completed.

Maintenance

Maintenance requirements typically include activities such as irrigation, mowing, trimming, removal of invasive species, and replanting when necessary. The use of fertilizers and pesticides should be minimized.

9.3.3.3 Permeable and Semi-Pervious Pavement.

Definition

Permeable and Semi-Pervious Pavement can be either permeable concrete or porous asphalt. Permeable concrete consists of concrete that is made without the fine (sand) fraction. Porous asphalt, also known as pervious, permeable, "popcorn", or open graded asphalt, is standard hot-mix asphalt with reduced sand or fines and allows water to drain through it. Modular pavement blocks are an alternative to permeable concrete and porous asphalt.

Design Criteria

In permeable concrete, eliminating the sand portion of the mix design increases the permeability, but greatly reduces the strength. Additives may be applied to the mix design to increase strength to a level that is comparable to a standard concrete mix. The lack of sand also shortens the setup time for concrete which makes it difficult to get a consistent texture. Use of permeable concrete should be done only with highly detailed specifications and an experienced contractor to minimize potential problems.

Permeable pavement is not meant to treat runoff from other areas, so the placement of permeable pavement should be such that it does not receive any runoff other than what falls directly on the surface of the paved areas. Parking lots constructed with permeable pavement should utilize curbs which are configured in such a way as to store the required rainfall treatment depth (1.64-inches for a 1.1 inch/hour storm) on the surface of the parking lot in case the pavement becomes plugged. When permeable concrete is used for sidewalks or residential driveways, no edging is required. In no case should runoff from other portions of the tract, including roofs and landscaped areas, be allowed to run onto the permeable surface.

There are two possible configurations of permeable pavement: with and without an underdrain. Systems constructed with an underdrain should include a layer of sand to filter the stormwater prior to surface discharge. This type of system does not require an impermeable liner. Permeable pavement systems without an underdrain treat stormwater runoff via filtration with an appropriate soil layer located beneath the pavement.

Porous asphalt over an aggregate storage bed will reduce storm water runoff volume, rate and pollutants. When properly constructed, porous asphalt is a durable and cost competitive alternative to conventional asphalt.

Porous asphalt comprises the surface layer of the permeable pavement structure and consists of open-graded coarse aggregate, bonded together by bituminous asphalt. A typical reduced fines mix is shown in Table 9-11.

Table 9-11: Asphalt Mix (Adams, 2003)	
Sieve Size	% Passing
½ in.	100
$^{3}/_{8}$ in.	95
#4	35
#8	15
#16	10
#30	2
Percent bituminous asphalt 5.75-6.0% by weight	

Polymers can also be added to the mix to increase strength for heavy load applications. The thickness of porous asphalt ranges from 2 to 4 inches depending on the expected traffic loads. The porous asphalt should have a minimum of 16% air voids.

Modular pavement comes in pre-formed modular pavers of brick and concrete. When the brick or concrete is laid on a permeable base, water will be allowed to infiltrate. Typically, the permeable base consists of 4”-6” of crushed stone beneath 2” of sand. Grass can be planted between the pavers, allowing structural support in infrequently used parking areas. Apply in low-volume parking lots and roads, and in high activity recreational areas like basketball and tennis courts or playground lots.

The area that can be served by permeable or semi-pervious pavement is generally limited to 0.25 to 10.0 acres and generally serves only a small section of the watershed. This BMP can also accept rooftop and adjacent parking lot runoff.

Maintenance

Maintenance requirements for permeable concrete and porous asphalt include sweeping with a vacuum type street sweeper at least twice per year to remove surface accumulations of sediment and other material. Pressure washing may also prove to be effective if the resulting water is immediately vacuumed from the surface. For modular pavements, routine mowing and irrigation of the grass is required. Any accumulated silt/debris should be removed as necessary.

9.3.3.4 Discharge of Roof Drains to Pervious Surface.

Definition

Roof drains which are set up to discharge to a pervious surface can both reduce the overall amount of runoff as well as increase the time of concentration of runoff that does remain on the surface.

Design Criteria

Gravel, crushed stone, modular paving blocks or pervious paving blocks can be used in addition to vegetated or landscaped areas as surfaces in which to direct flow from roof drains. Gravel or crushed stone should be placed to a thickness of 4”-6”. The area of pervious surface should be at least equal to the drainage area of the roof drain (i.e. the area of the roof top which is served by the roof drain). The slope of the pervious surface shall not exceed 5% in any direction.

Maintenance

The pervious surface should be inspected regularly after rain events for accumulation of sediment/debris. Any accumulations should be promptly removed. If modular pavements are used for the pervious surface, maintenance of the grass shall include regular irrigation and mowing as needed.

9.3.3.5 Extended Detention Basins for Storm Water Quality Benefits.

Definition

Extended detention facilities are ponds that capture and temporarily detain the water quality volume as well as reduce maximum runoff rates. They are intended to serve primarily as settling basins for the solids fraction and as a means of limiting downstream erosion by controlling peak flow rates during erosive events.

Design Criteria

Extended detention facilities may be constructed either online or offline. They are generally best suited to drainage areas greater than 5 acres, since the outlet orifice becomes prone to clogging for small water quality volumes. In addition, extended detention basins tend to accumulate debris deposits rapidly, making regular maintenance necessary to minimize aesthetic and performance problems. They can be combined with flood and erosion control detention facilities by providing additional storage above the water quality volume.

The facility should be sized to remove 80% of the increase in total suspended solids loading resulting from development plus a 20% increase to accommodate reductions in the available storage volume due to deposition of solids in the time between full-scale maintenance

activities. A fixed vertical sediment depth marker should be installed in the basin to indicate when sediment accumulation equals 20% of the water quality volume and sediment removal is required.

The basin should be configured such that the flowpath is maximized between the entrance points and the outlets. The ratio of flowpath length to width from the inlet to the outlet should be at least 2:1 (L:W). The flowpath length is defined as the distance from the inlet to the outlet as measured at the surface. The width is defined as the mean width of the basin. Basin depths optimally range from 2 to 5 feet. The basin should include a sediment forebay to provide the opportunity for larger particles to settle out. The forebay volume should be about 10% of the water quality volume and be provided with a fixed vertical sediment depth marker to measure sediment accumulation.

Both conventional and enhanced extended detention should be designed with a dual stage configuration. Stage 1 is intended to serve primarily as a sediment forebay for larger particulates. Stage 2 is generally planted with vegetation adaptable to periodic inundation and may contain a permanent micropool for enhanced extended detention. The design depth of Stage 1 should range from 2 to 5 feet. A stabilized low flow channel is required to convey low flows through Stage 1 to Stage 2. Rock riprap should be utilized to reduce velocities and spread the flow into the Stage 2 pond. The channel should maintain a longitudinal slope of 2-5%. The lateral slope across Stage 1 toward the low flow channel should be 1.0-1.5%. The bottom of Stage 2 should be 1.5 to 3.0-feet lower than the bottom of Stage 1. The extended detention basin is optimally designed to have a gradual expansion from the inlet toward the middle of the facility and a gradual contraction toward the basin outfall.

The side slopes of the pond should be 3:1 (H:V) or flatter for grass slopes. Energy dissipation is required at the basin inlet to reduce resuspension of accumulated sediment. For the outflow structure, a reverse slope outflow pipe design is preferred if a second stage micropool is provided in the facility. Otherwise, the facility's drawdown time should be regulated by a gate valve or orifice plate located downstream of the primary outflow opening. The outflow structure should have a trash rack or other acceptable means of preventing clogging at the entrance to the outflow pipes.

The outflow structure should be sized to allow for complete drawdown of the water quality volume in 48 hours. No more than 50% of the water quality volume should drain from the facility within the first 24 hours. A valve or orifice can be used to regulate the rate of discharge from the basin.

The facility should have a separate drain pipe with a manual valve that can completely or partially drain the pond for maintenance purposes. To allow for possible sediment accumulation, the submerged end of the pipe should be protected, and the drain pipe should be sized one pipe schedule higher than the calculated diameter needed to drain the pond

within 24 hours. The valves should be located at a point where they can be operated in a safe and convenient manner. For online facilities, the principal and emergency spillways must be sized to provide 1.0 foot of freeboard and pass the flow from the 100-year storm.

The facility should be planted and maintained to provide for a full and robust vegetative cover. The following wet tolerant species are recommended for planting within the bottom stage (LCRA, 1998):

- Bushy Bluestem
- Sedges
- Cyperus
- Switch Grass
- Spike Rush
- Green Sprangletop
- Indian Grass
- Bullrush
- Scouring Rush
- Eastern Gamma
- Dropseed Iris

A plan should be provided indicating how aquatic and terrestrial areas will be stabilized. A minimum 25-foot vegetative buffer area should extend away from the top slope of the pond in all directions. Vegetation on the pond embankments should be mowed as appropriate to prevent the establishment of woody vegetation.

When the pond is designed as an offline facility, a splitter structure is used to isolate the water quality volume. The splitter box, or other flow diverting approach, should be designed to convey the 25-year storm event while providing at least 1.0 foot of freeboard along pond side slopes.

For online facilities, special consideration should be given to the facility's outfall location. Flared pipe end sections that discharge at or near the stream invert are preferred. The channel immediately below the pond outfall should be modified to conform to natural dimensions, and lined with large stone riprap placed over filter cloth. A stilling basin may be required to reduce flow velocities from the primary spillway to non-erosive velocities.

Maintenance

Maintenance requirements for extended detention basins should include mowing at least twice annually. Vegetation should be mowed so as to limit maximum height to 18-inches. During mowing operations, debris and litter should be removed from the site. After significant rain events, the facility should be inspected and any areas of erosion should be

repaired and revegetated. Similarly, any accumulations of sediment should be removed after significant rain events.

9.3.3.6 Retention Ponds.

Definition

Retention ponds are basins which capture and dispose of storm water runoff without directly releasing the captured flow into receiving streams.

Design Criteria

Capture of storm water in retention ponds can consist of virtually any kind of runoff facility ranging from a fully dry, concrete-lined to vegetated with a permanent pool. This flexibility allows for excellent aesthetic appeal. Retention ponds should have a pump and wet well system that is automated with a rainfall or soil moisture sensor to allow for irrigation only during periods when required infiltration rates can be realized.

Storage volume can be flexible as long as an appropriate pump and wet well system can be accommodated. The water quality volume should be increased by 20% to accommodate reductions in the available storage volume due to deposition of solids in the time between full-scale maintenance activities.

A reliable pump, wet well, and rainfall or soil moisture sensor system should be used to distribute the water quality volume. A pump capable of delivering 100% of the design capacity should be provided. Valves shall be located outside the wet well on the discharge side of each pump to isolate the pumps for maintenance and for throttling, if necessary. Pumps should be selected to operate within 20% of their best operating efficiency. A high/low-pressure pump shut off system should be installed in the pump discharge piping.

The pond should have an intake riser with a screen for stormwater to pass through prior to entering the wet well. This is to prevent clogging of distribution pipes and sprinklers by large debris.

The pond should be designed as an offline facility and a splitter box should also be included in the design of the pond to isolate the water quality volume. The splitter box should be designed to convey the 25-year storm event while providing at least 1.0 foot of freeboard along basin side slopes.

Detention time in the retention pond should allow for complete drawdown of the water quality volume within 72 hours. Irrigation should not begin within 12-hours of the end of rainfall so that direct storm runoff has ceased and soils are not saturated. Consequently, the length of the active irrigation period is 60 hours. The irrigation should include a cycling factor of ½, so that each portion of the area will be irrigated for only 30 hours during the total

of 60 hours allowed for disposal of the water quality volume. Continuous application on any area should not exceed 2-hours. Division of the irrigation area into two or more sections such that irrigation occurs alternately in each section is an acceptable way to meet this requirement. Irrigation should not occur during subsequent rainfall events.

The irrigation site must be pervious and on slopes of less that 10%. A geological assessment is required for proposed irrigation areas to assure that there is a minimum of 12-inches of soil cover and no geologic/sensitive features that could allow the water to directly enter the aquifer. Rocky soils are acceptable for irrigation; however, the coarse material (diameter greater than 0.5-inches) should not account for more than 30% of the soil volume. Optimum sites for irrigation include recreational and greenbelt areas as well as landscaping in commercial developments. The irrigation area should also have at least a 100-foot buffer from wells, septic systems, natural wetlands, and streams.

The irrigation rate must be low enough so that the irrigation does not produce any surface runoff (i.e. the irrigation rate shall not exceed the permeability of the soil). The minimum required irrigation area should be calculated using the following formula:

$$A = (12xV) / (Txr)$$

Where:

A = area required for irrigation (ft^2)

V = water quality volume (ft^3)

T = period of active irrigation (30 hr)

r = permeability (in/hr)

The permeability of the soils in the area should be determined using a double ring infiltrometer (ASTM D 3385-94) or from county soil surveys prepared by the Natural Resource Conservation Commission (NRCS). If a range of permeabilities is reported, the average value should be used for the calculation. If no permeability data is available, a value of 0.1 in/hr shall be used.

Vegetation in irrigated areas should consist of native vegetation or re-established native vegetation species. These areas should not receive any fertilizers, pesticides, or herbicides. Vegetation on pond embankments should be mowed as appropriate to prevent the establishment of woody vegetation.

Maintenance

Maintenance requirements for retention ponds should include mowing at least twice annually. Vegetation should be mowed so as to limit maximum height to 18-inches. During mowing operations, debris and litter should be removed from the site. After significant rain events, the facility should be inspected and any areas of erosion should be repaired and revegetated. Similarly, any accumulations of sediment should be removed after significant rain events.

9.3.3.7 Detention Pond Outlet for Erosion Protection and Storm Water Quality Benefits.

Definition

Detention pond outlets for erosion protection and storm water quality benefits include features which aid in settling sediments and reducing the energy of storm water as it exits the detention pond.

Design Criteria

Riser pipe outlets, rock riprap and micropools are several examples of ways a detention pond can be improved to also provide storm water quality benefits.

Riser pipe outlets provide an opportunity for sediments to settle out prior to draining storm water out of the pond. Riser pipes can be sized to release pre-development flow for a given storm event or they can be sized to be used in conjunction with other elements for metering out flow such as culverts and weirs.

Rock riprap placed on the downstream side of the outlet structure has the dual effect of dissipating the energy of the storm water as it leaves the outlet structure and also providing a place for sediments to settle out. Rock riprap should be sized according to the flow and velocity out of the pond for the design storm.

A micropool is a relatively shallow and undrained area at the outlet which has the purpose of concentrating finer sediment and reducing re-suspension. The micropool is normally planted with hardy wetland species such as cattails. It can be facilitated by the use of a reversed slope outlet pipe.

Maintenance

Outlet components should be inspected after significant storm events. Any accumulations of sediment or debris should be removed. Frequency of sediment and debris removal will depend on the amount of sediment accumulation that is incorporated into the pond's design as well as the nature of storm events experienced by the detention pond. Riser pipes should be checked after every significant storm to remove any debris which may cause clogging of the risers.

9.3.3.8 Subsurface Treatment Devices.

Definition

Subsurface treatment devices capture storm water and treat it in an underground facility before releasing it into a storm sewer, drainage channel or natural conveyance. Two types of subsurface treatment devices include catch basins and oil/grit separators. Typically these devices are designed as inlet devices for storm sewers. Catch basins primarily trap coarse sediments and large debris while oil and grit separators have several different designs and different removal capabilities.

Design Criteria

Catch basins are chambers or sumps installed in a storm sewer, usually at the curb, which allow surface runoff to enter the sewer. The catch basin typically has a low area below the flowline of the outlet pipe where sediment is retained. The volume of the catch basin typically ranges from 0.5 to 1.5 cubic yards. The rate at which catch basins fill, and thus require maintenance, varies depending on surrounding land uses. Cleaning should be done on at least a semi-annual basis and more frequently for areas which generate more sediment in runoff, such as areas under construction. Catch basins should not be used as stand-alone treatment devices, but instead should be incorporated into a system which includes additional forms of treatment, including non-structural controls.

Oil and grit separators are inlet devices which separate oil and sediments from storm water. These devices have chambers designed to remove sediment and hydrocarbons from urban runoff. They are normally used in areas with heavy traffic or high potential for petroleum spills such as parking lots, gas stations, roads, and loading areas. There are three general types of separators. The simple spill control (SC) separator typically used with storm water detention facilities, is effective at retaining only small spills. Diluted oil droplets are not captured in this system. More sophisticated designs for high load situations include the American Petroleum Institute (API) and Coalescing Plate Interceptor (CPI) designs. The API design uses a basin with baffles to improve hydraulic conditions for settling solids and floating oil. The CPI design improves coalescing and settling by directing the runoff through closely positioned parallel plates set at an angle. Removal efficiencies of each design are similar, but the CPI separator uses 50% to 80% less space.

Oil and grit separators are restricted to small, highly impervious drainage areas of two acres or less, and must connect to a storm sewer. They should be considered as a primary BMP only when properly sized and combined with a program of frequent inspection and maintenance.

In order to provide at least moderate sediment, oil and grease pollutant removal, oil and grit separators should be of the API-type or CPI-type sized to capture 90-micron particles, or an

equivalent. The separator should be an off-line design, capturing only the first flush of runoff and should not interfere with normal storm sewer function.

Maintenance

Each structure should be checked weekly and maintenance should be performed as necessary. Each structure should be cleaned out at least twice per year to maintain pollutant removal capabilities. Sediment should be cleaned out with a vacuum truck. Waste oil and residuals should be disposed in a manner consistent with TCEQ requirements.

9.3.3.9 Landscaping.

Definition

Landscaping as a permanent best management practice keeps landscapes visually attractive while conserving water resources, reducing pollution and protecting the environment.

Design Criteria

On slopes of more than 10%, biodegradable erosion control blankets shall be used for temporary slope protection. The erosion control blankets shall be coarse in nature so as to allow varying leaf sizes to penetrate through the blankets.

By using the proper plant selection, irrigation, fertilization, and maintenance techniques, urban landscapes can better coexist with the natural environment. The following is a list of landscaping techniques that should be followed for utilization as a best management practice.

1. Select plants that match the existing light conditions; they will grow better and require less water.
2. Match surface and soil drainage conditions to plant moisture requirements.
3. Select plants that grow well in the temperature ranges of the area.
4. Select plants that are regionally adapted to the average rainfall of the area.
5. Preserve established vegetation growing on a site where possible; it has an extensive root system and requires less irrigation water than newly planted trees and shrubs.
6. Space plants according to their mature size to reduce competition for water.
7. Concentrate seasonal color in small, high impact areas to reduce overall water requirements.
8. Avoid constructing raised beds under trees due to root competition for available water.
9. Develop a landscape plan BEFORE designing an irrigation system.
10. Incorporate shade trees into the landscape to reduce evaporative water loss.
11. Select and group plants according to their water needs and drought tolerance.
12. Divide the landscape into water-use zones.

13. Avoid small, irregular-shaped island plantings in turf grass areas because they are difficult to irrigate.
14. Consider irrigation sprinklers when designing turf grass areas and planting beds.
15. Move or eliminate plants not suited to the existing site conditions and irrigation.

Plant selection should be based on adaptability to the local region's soil and climate. Most native plants have lower water demands, fewer pest problems and less fertilizer needs than many non-adapted, exotic plants brought into the local landscape.

The use of turf in a landscape should be minimized because most turf requires substantially more water than planted beds. Strips of grass, such as those commonly used in parking islands between sidewalks and the roadway, should be eliminated to the greatest extent possible. These strips are difficult to maintain and water efficiently. Bushes, mulch, or permeable hardscape are preferable alternatives to grass in these strips.

Maintenance

Maintenance can be significantly reduced in a properly planned landscape, however, some maintenance is required with all landscapes. Prune shrubs and trees during winter months to promote blossoms and to remove dead or damaged branches, which could promote disease. Remove dead flowers prior to seed pod development. This promotes more flowers and reduces the potential for self-sown seedlings to over-run the landscape. Aeration of mulched beds and turf areas should be performed semi-annually to ensure that roots are healthy and that anaerobic areas do not develop in mulched beds. Mow turf areas frequently enough such that less than 1/3 of the blade area is removed in a single mowing. Mowing should also be done at the recommended height for each species. Turf should not be mowed when wet. Pest management includes selecting pest-resistant plants and spraying insects with organic pesticides, such as orange oil or BT bacteria. Only as a last resort should chemical pesticides or herbicides be used.

The primary benefit of BMP landscaping is savings in water usage. In order to sustain water savings, regular maintenance and evaluation of irrigation systems is required. Maintenance programs must include pre-irrigation season checks for leaks and irrigation uniformity. Timers should be adjusted monthly or run manually.

9.3.3.10 Cluster Design.

Definition

Cluster design is a form of low impact development which sets aside key natural features and concentrates development in tighter patterns on the remaining land. The principal goal of cluster design is to ensure maximum protection of the ecological integrity of the receiving water by maintaining the existing hydrologic regime. Cluster design also provides

consolidated spaces to support wetland plants and wildlife. As a result, it provides natural amenities in terms of plant and animal diversity in close proximity to human habitation.

Cluster design techniques alone do not offer flood protection. Additional flood design criteria should be reviewed to ensure flood protection is provided. Some specific planning considerations include:

1. Minimizing environmental impacts and hydrologic changes.
2. Preserve adequate open space within the development site for bio-retention, and treatment of runoff from rooftops and other impervious surfaces.

Design Criteria

To reduce development impacts and preserve the predevelopment hydrologic conditions, the following could be used as general design guidelines.

1. Minimize land clearing that requires removal of the native vegetation.
2. Minimize or avoid mass grading and utilize selective clearing.
3. Reduce impervious surface area and minimize connected impervious surfaces.
4. Increase opportunity for on-site retention, detention, and treatment.
5. Maintain predevelopment hydrologic pattern.
6. Utilize native vegetation.
7. Utilize undisturbed existing vegetation buffer strips and areas.
8. Whenever site condition permits, utilize extensive use of swales, grass filter strips, and randomly place biofilters. Direct roof and landscape open area runoff to vegetated biofilter strips and swales.
9. Preserve soils and areas with high infiltration rate.
10. Grade the site to maximize the overland sheet flow distance.
11. Grade the site to maximize the overland sheet flow distance.
12. Increase flow-paths or travel distances for surface runoff.
13. Maintain existing time of concentration and minimize impact of the runoff coefficient number.
14. Utilize cisterns, rain barrels, bioretention areas, and created seasonal or permanent wetlands.
15. Provide adequate buffers between development and natural resources, critical areas and drainage ways.
16. Handle road runoff separate from roof top and landscape area runoff.
17. Integrate low-rise and high-rise buildings, town houses, in single-family residential to reduce land consumption.
18. Utilize high points and natural topography to guide plan layout.
19. Preserve undisturbed vegetated buffer around perimeter of development.

Maintenance

Maintenance requirements associated with cluster design are generally limited to the preservation of existing natural areas since cluster design is focused around the layout of a development rather than a specific type of BMP facility. Any additional BMPs which are utilized within a cluster design shall be maintained as prescribed for that specific BMP.

9.3.3.11 Preservation of Existing Tree Canopy.

Definition

Preservation of the existing tree canopy consists of individual trees or groupings of trees which are to be permanently protected. These areas may be protected in either a natural state or by selective removal of underbrush and/or trees at the time of development plan approval.

Design Criteria

Tree Canopy Protection Areas (TCPAs) shall be clearly designated on approved development plans by location. The following are some basic requirements of a TCPA:

1. Minimum distance from edge of TCPA to nearest structure = 15-feet
2. Minimum distance from edge of TCPA to nearest street or parking lot = 10-feet
3. For selective tree removal, maximum tree caliper that may be removed = 2-inches

Maintenance

As trees are lost through natural causes, new trees shall be planted in order to maintain the minimum tree canopy as specified on the approved development plan. No clearing, grading or other land disturbing activity shall take place in a TCPA beyond pruning to improve the general health of a tree or to remove dead or declining trees may pose a public health or safety threat.

TCPAs shall be protected either by dedicated easement or other mechanism shown on the approved development plan. Subdivision deeds of restriction are used as one tool to inform future property owners of clearing restrictions.

One exception to the requirements listed above: Individual trees that are designated as TCPAs on individually owned lots within single-family residential subdivision developments may be removed as long as each removed tree is replaced with another tree of a similar type elsewhere on that lot.

9. 3.4 Bibliography

1. Adams, M., Porous Asphalt Pavement with Recharge Beds: 20 Years & Still Working. *Stormwater*. May/June 2003.

2. Houston, City of, Harris County, Harris County Flood Control District, *Stormwater Quality Management Guidance Manual*. 2001 Edition.

3. Barrett, M., Texas Commission on Environmental Quality, *Edwards Aquifer Technical Guidance Manual*. June 2005.

STRAW (OR HAY) BALE BARRIER . . . . . SBB

SILT FENCE . . . . . SF

STABILIZED CONSTRUCTION ENTRANCE . . . . . .

OUTLET STRUCTURE. . . . . OS L=

GRASS OUTLET STRUCTURE . . . . . GOS L=

DIVERSION . . . . . D D

GRASSED WATERWAY. . . . . GW

LINED WATERWAY . . . . . LW

SEDIMENT BASIN . . . . . .

RIPRAP . . . . . .

NOTE:FOR ILLUSTRATIVE PURPOSES ONLY

	City of Temple	CITY OF TEMPLE ENGINEERING DEPARTMENT 3210 E. Avenue H, Bldg. A — TEMPLE, TX. 76501-8402
		FIG. 9-1 STANDARD SYMBOLS FOR SOIL EROSION AND SEDIMENT CONTROL — SCALE: NTS

P:\Temple\2011\2011-115\Permanent BMP Details.dwg - Symbols

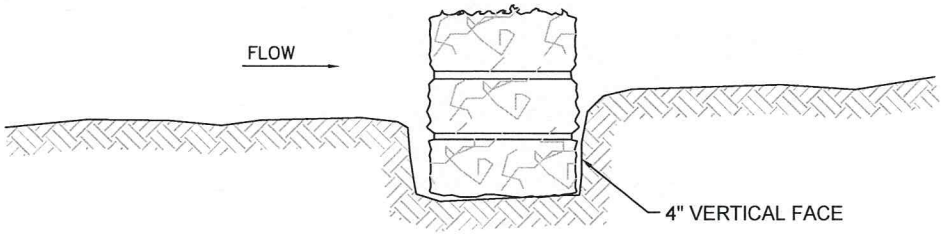

BEDDING DETAIL

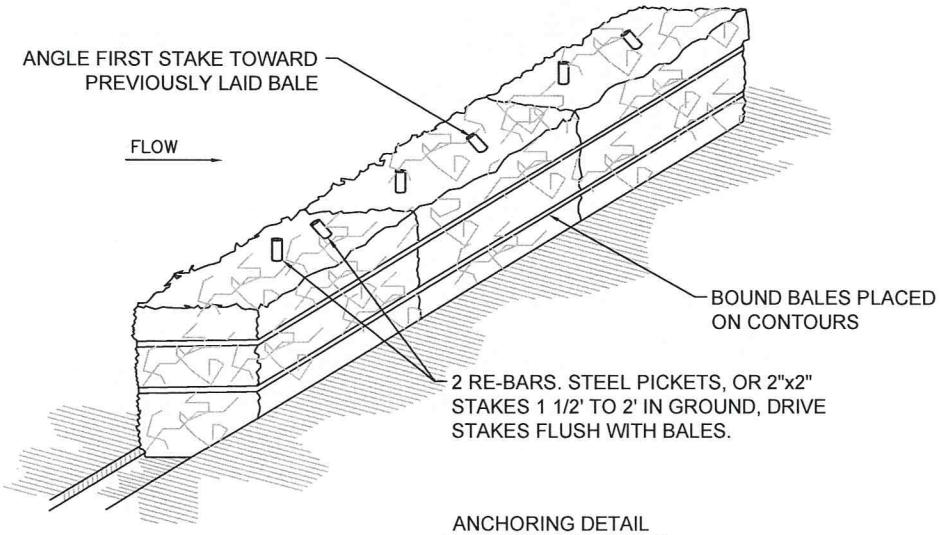

ANCHORING DETAIL

STANDARD SYMBOL

SBB

NOTE:FOR ILLUSTRATIVE PURPOSES ONLY

CITY OF TEMPLE
ENGINEERING DEPARTMENT

3210 E. Avenue H, Bldg. A TEMPLE, TX. 76501-8402

FIG. 9-2 STRAW BALE BARRIER

SCALE: NTS

P:\Temple\2011\2011-115\Permanent BMP Details.dwg - Straw

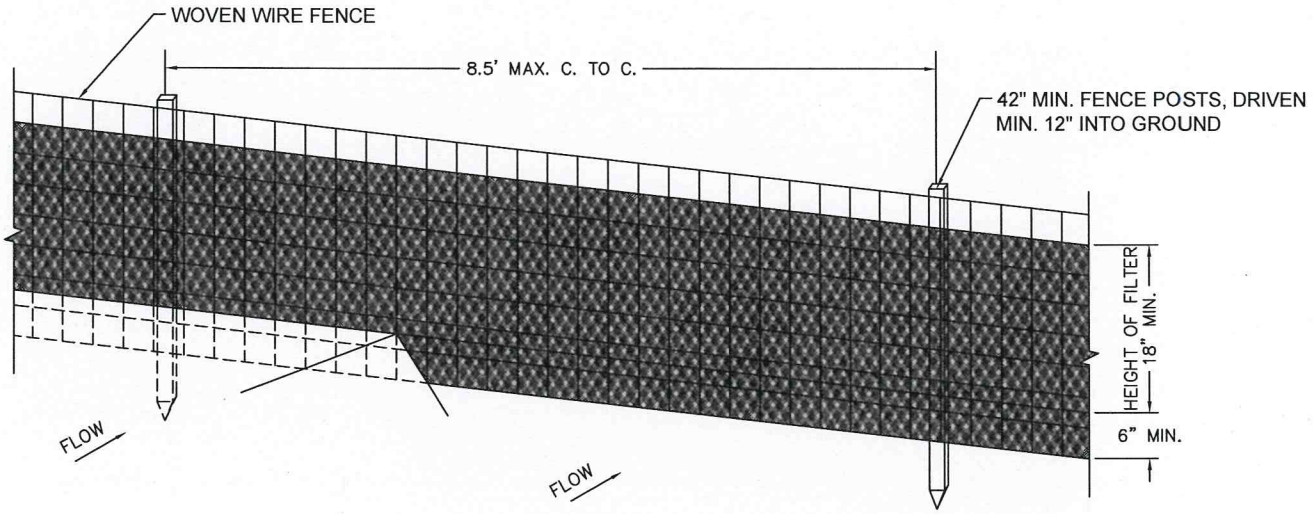

PERSPECTIVE VIEW

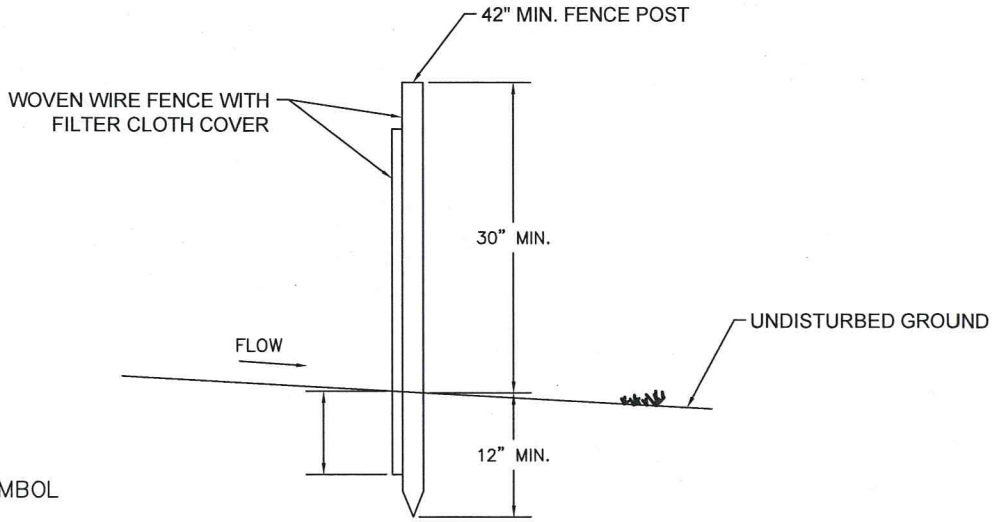

SECTION

STANDARD SYMBOL

SF

NOTE:FOR ILLUSTRATIVE PURPOSES ONLY

CITY OF TEMPLE
ENGINEERING DEPARTMENT

3210 E. Avenue H, Bldg. A TEMPLE, TX. 76501-8402

FIG. 9-3 SILT FENCE

SCALE: NTS

P:\Temple\2011\2011-115\Permanent BMP Details.dwg - Silt Fence

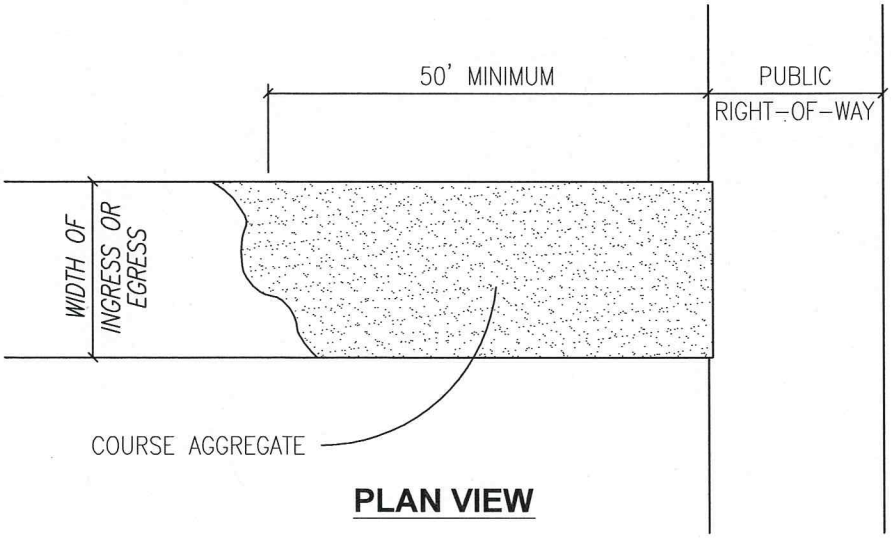

PLAN VIEW

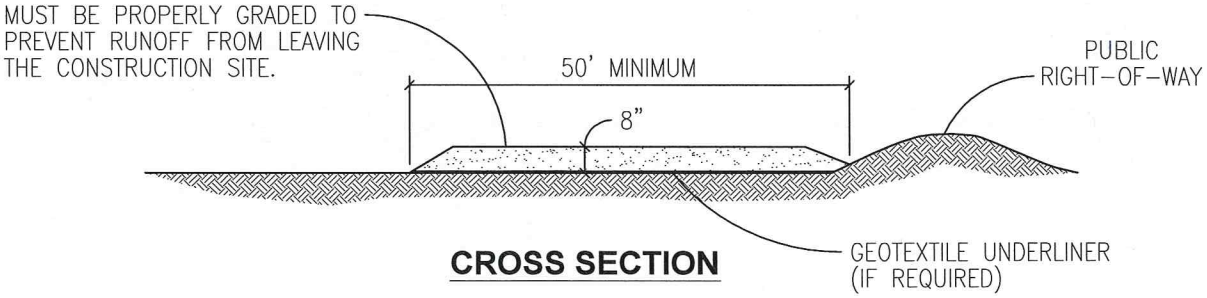

CROSS SECTION

INSTALLATION:

CLEAR THE AREA OF DEBRIS, ROCKS OR PLANTS THAT WILL INTERFERE WITH INSTALLATION.

GRADE THE AREA FOR THE ENTRANCE TO FLOW BACK ON TO THE CONSTRUCTION SITE. RUNOFF FROM THE STABILIZED CONSTRUCTION ENTRANCE ONTO A PUBLIC STREET WILL NOT BE ACCEPTED.

PLACE GEOTEXTILE FABRIC IF REQUIRED.

PLACE ROCK AS REQUIRED.

ROCK SIZE – 3 TO 5 INCHES OPEN GRADED ROCK.

STABILIZED CONSTRUCTION ENTRANCE

NOT TO SCALE

NOTE:FOR ILLUSTRATIVE PURPOSES ONLY

	CITY OF TEMPLE ENGINEERING DEPARTMENT 3210 E. Avenue H, Bldg. A TEMPLE, TX. 76501-8402	
	FIG. 9-4 STABILIZED CONSTRUCTION ENTRANCE	SCALE: NTS

P:\Temple\2011\2011-115\Permanent BMP Details.dwg - Stabilized

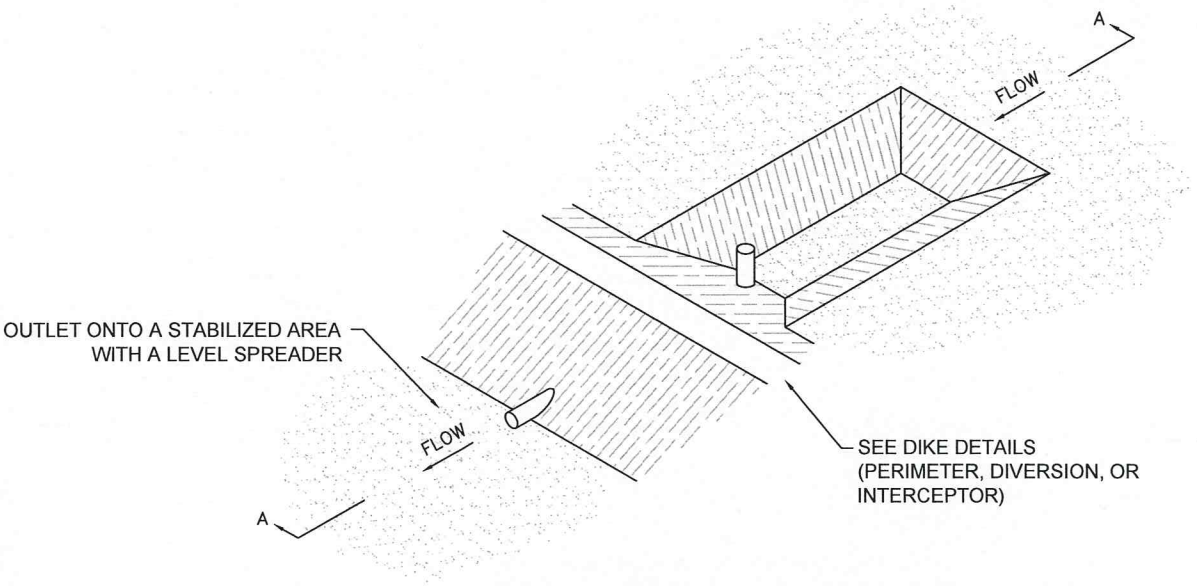

SEDIMENT BASIN AND/OR TRAP WITH PIPE OUTLET

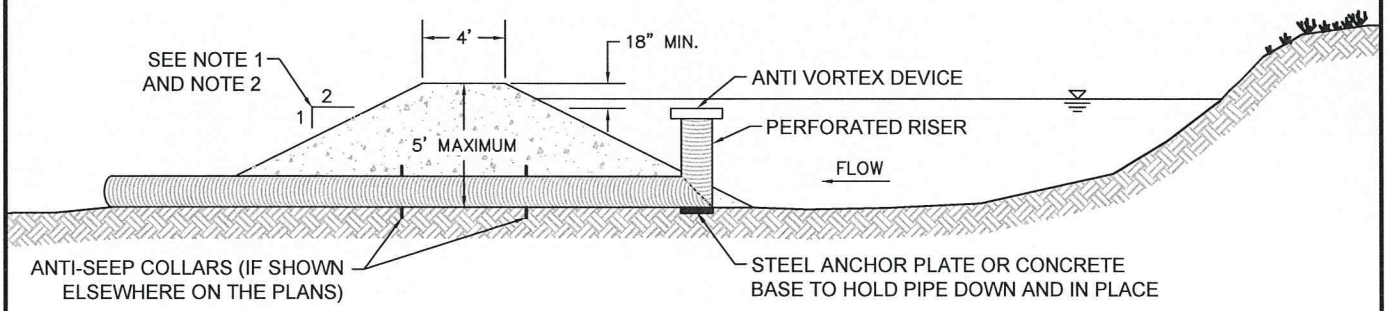

SECTION A - A

SEDIMENT BASIN USAGE GUIDELINES

A SEDIMENT BASIN MAY BE USED TO PRECIPITATE SEDIMENT OUT OF RUNOFF DRAINING FROM AN UNSTABILIZED AREA.

BASINS: THE DRAINAGE AREA FOR A SEDIMENT BASIN SHOULD NOT EXCEED 100 ACRES. THE BASIN CAPACITY SHALL BE AT LEAST 1800 CF/ACRE OF DRAINAGE AREA (0.5" OVER THE DRAINAGE AREA).

THE BASIN SHOULD HAVE A 40 HOUR DRAW-DOWN TIME WITH AN EMERGENCY SPILLWAY. THE SPILLWAY MAY BE DESIGNED TO PASS THE PEAK RATE OF RUNOFF FROM A 25 YEAR FREQUENCY STORM. THE 100 YEAR STORM SHOULD BE INVESTIGATED TO CONSIDER POSSIBLE FLOODING IMPACTS.

THE ENTRANCE INTO THE BASIN SHOULD BE PROTECTED FROM EROSION. THE BASIN SHOULD BE CLEANED WHEN THE CAPACITY HAS BEEN REDUCED BY 1/3.

ADDITIONAL CONSTRUCTION NOTES:

1. SIDE SLOPES WITHIN THE SAFETY CLEAR ZONE OF A ROADWAY SHALL BE 6:1 OR FLATTER. PROTECT THE TRAVELING PUBLIC FROM INLET STACKS WITHIN THE CLEAR ZONE.
2. SEDIMENT BASINS SHALL HAVE SIDE SLOPES OF 3:1 OR FLATTER.

NOTE:FOR ILLUSTRATIVE PURPOSES ONLY

	CITY OF TEMPLE ENGINEERING DEPARTMENT 3210 E. Avenue H, Bldg. A — TEMPLE, TX. 76501-8402	
	FIG. 9-5 SEDIMENT BASIN	SCALE: NTS

P:\Temple\2011\2011-115\Permanent BMP Details.dwg - Sediment Basin

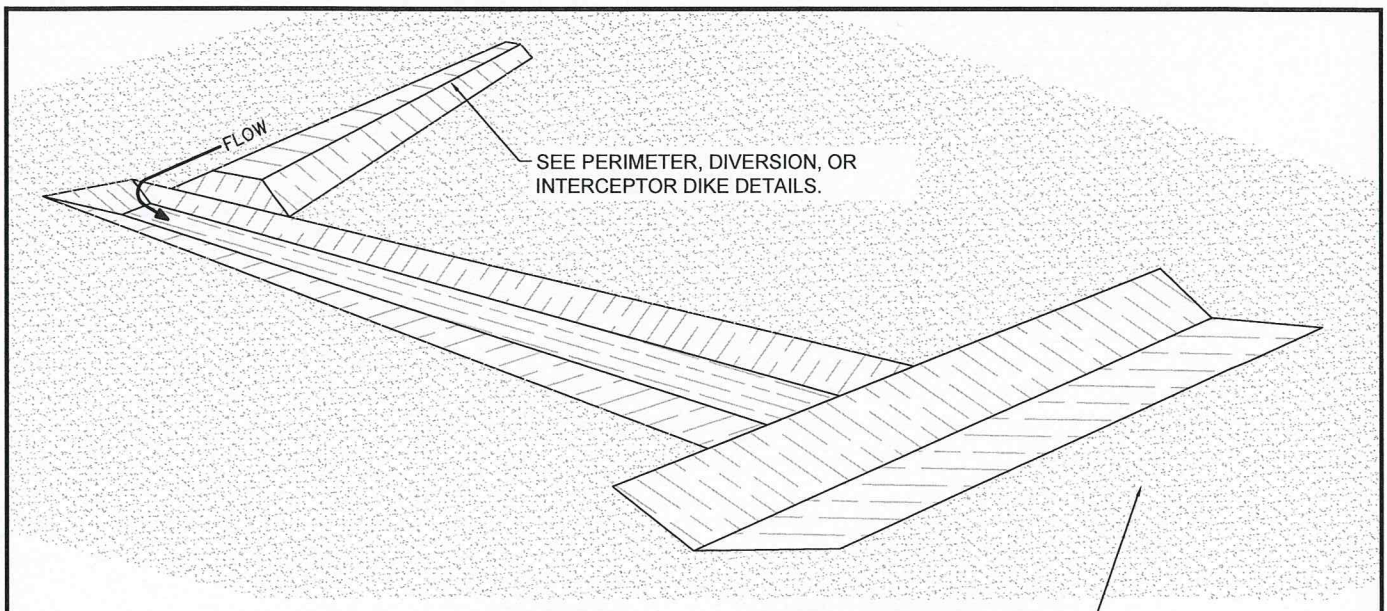

DIVERSION SWALE

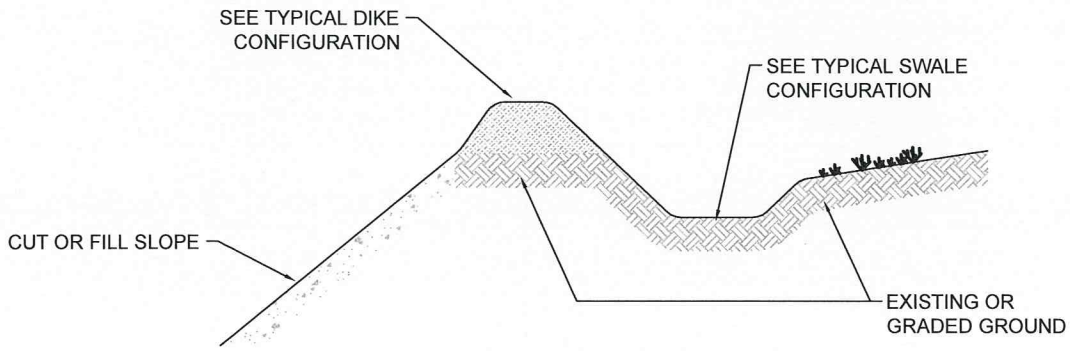

DIVERSION DIKE WITH SWALE

SWALE AND DIKE/SWALE USAGE GUIDELINES

A SWALE OR DIKE/SWALE MAY BE USED TO INTERCEPT RUNOFF AND DIVERT IT AROUND UNSTABILIZED AREAS OR TO DIVERT SEDIMENT LADEN RUNOFF TO AN EROSION CONTROL DEVICE (SEDIMENT BASIN OR ROCK TRAP, ROCK FILTER DAM, ETC.).

THE DRAINAGE AREA CONTRIBUTING RUNOFF TO A SWALE OR DIKE/SWALE SHOULD NOT EXCEED 5 ACRES. THE SPACING OF SWALES AND DIKE/SWALES SHOULD BE AS FOLLOWS:

SLOPE OF DISTURBED AREAS ABOVE DIKE	GREATER THAN 10%	5 – 10%	LESS THAN 5%
MAXIMUM DISTANCE BETWEEN DIKES	100'	200'	300'

INTERCEPTED RUNOFF FLOWING IN A SWALE OR DIKE/SWALE SHOULD OUTLET TO A STABILIZED AREA (VEGETATION, ROCK, ECT.).

NOTE:FOR ILLUSTRATIVE PURPOSES ONLY

CITY OF TEMPLE
ENGINEERING DEPARTMENT

3210 E. Avenue H, Bldg. A — TEMPLE, TX. 76501-8402

FIG. 9-6 DIVERSION

SCALE: NTS

P:\Temple\2011\2011-115\Permanent BMP Details.dwg - Diversion

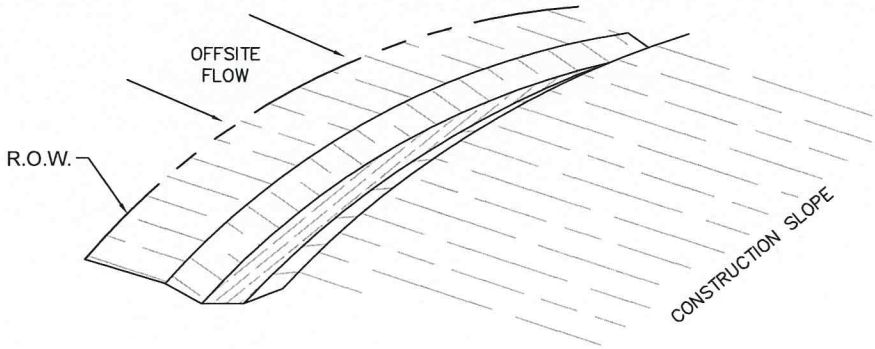

PERIMETER SWALE

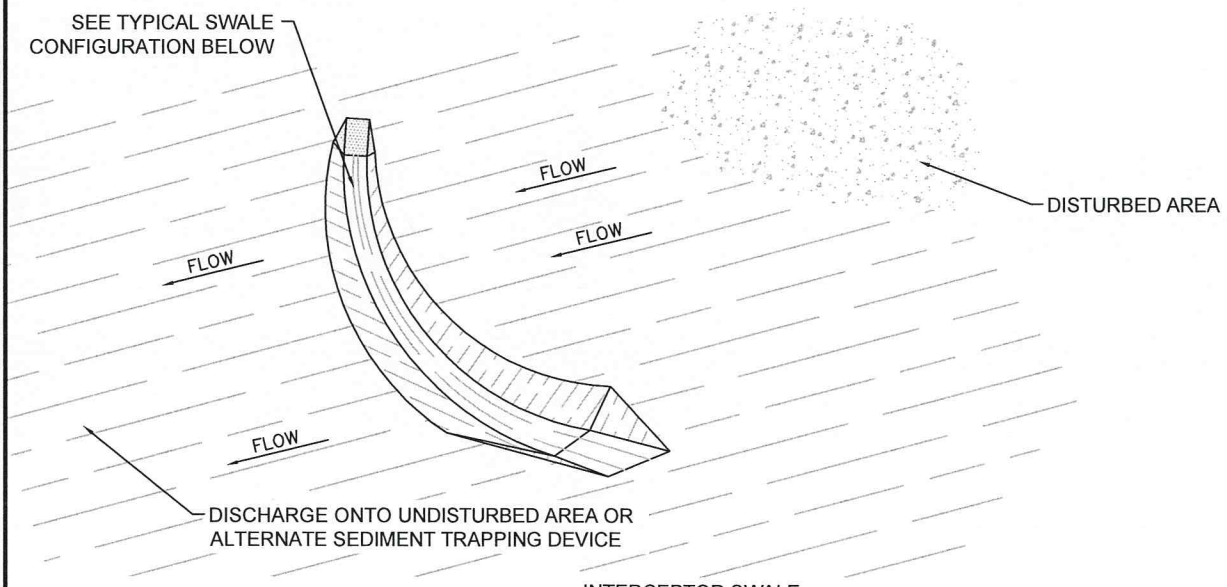

INTERCEPTOR SWALE

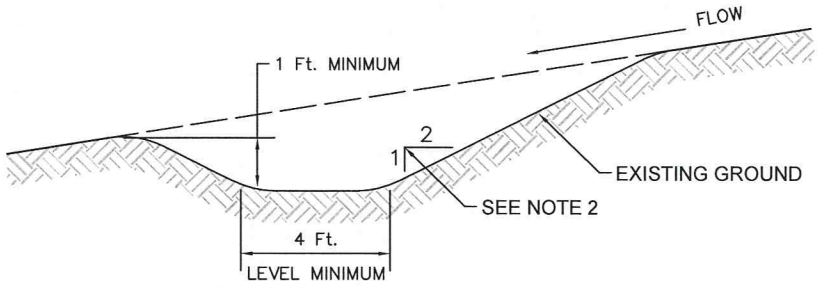

TYPICAL SWALE CONFIGURATION

GENERAL NOTES:

1) DIMENSIONS OF SWALE MAY BE MODIFIED WITH PRIOR APPROVAL OF THE ENGINEER.
2) SIDE SLOPES WITHIN THE SAFETY CLEAR ZONE OF A ROADWAY SHALL BE 6:1 OR FLATTER.
3) GRADING SHALL BE SHOWN ELSE WHERE ON THE PLANS OR AS DIRECTED BY THE ENGINEER.
4) THE ENGINEER RESERVES THE RIGHT TO MODIFY THE DIMENSIONS SHOWN FOR THE SWALE DEPENDENT ON RUNOFF VOLUME CHARACTERISTICS.
5) SWALES THAT ARE IN PLACE FOR MORE THAN 14 CALENDER DAYS SHOULD BE STABILIZED THROUGH SEEDING OR OTHER MEASURES TO CONTROL SEDIMENT RUNOFF.
6) THE GUIDELINES SOWN HEREON ARE SUGGESTIONS ONLY AND MAY BE MODIFIED BY THE ENGINEER.

NOTE:FOR ILLUSTRATIVE PURPOSES ONLY

City of Temple

CITY OF TEMPLE
ENGINEERING DEPARTMENT

3210 E. Avenue H, Bldg. A TEMPLE, TX. 76501-8402

FIG. 9-7 GRASSED WATERWAY OR OUTLET

SCALE: NTS

P:\Temple\2011\2011-115\Permanent BMP Details.dwg - Grass Waterway

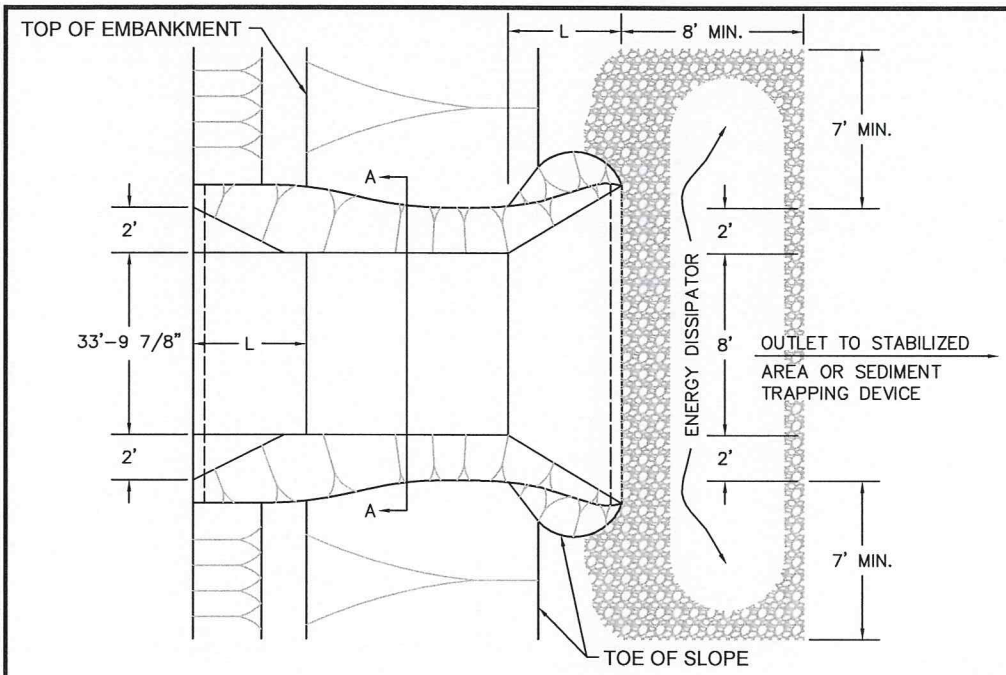

PLAN VIEW

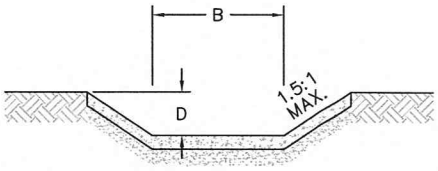

SECTION A - A

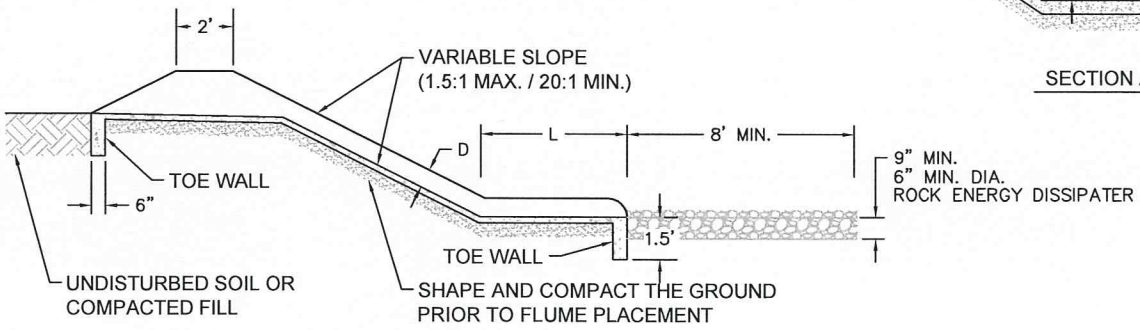

PROFILE VIEW

GENERAL NOTES

1. THE GROUP/SIZE IS A DESIGNATOR FOR THE DIMENSIONS OF THE PAVED FLUME. THE GROUP/SIZE IS DESIGNATED BY A LETTER (A OR B) AND THE BOTTOM (B) DIMENSION. THE APPROPRIATE SIZE SHALL BE INDICATED ON THE CONSTRUCTION PLANS.
2. FOR HIGH VELOCITY FLOWS, THE AGGREGATE OF THE ENERGY DISSIPATER SHOULD BE SECURED WITH 20-GAUGE GALVANIZED WOVEN WIRE MESH WITH 1" DIAMETER HEXAGONAL OPENINGS. THE AGGREGATE SHOULD BE PLACED ON THE MESH TO THE DIMENSIONS SPECIFIED. THE MESH SHALL BE FOLDED AT THE UPSTREAM SIDE OVER THE AGGREGATE AND TIGHTLY SECURED TO ITSELF ON THE DOWNSTREAM SIDE USING WIRE TIES OR HOG RINGS.
3. THE GUIDELINES SHOWN HEREON ARE SUGGESTIONS ONLY AND MAY BE MODIFIED BY THE ENGINEER.

DESIGN CRITERIA					
GROUP/ SIZE	B BOTTOM WIDTH	H MIN.	D MIN.	L MIN.	MAXIMUM DRAINAGE AREA
A-2	2'	1.5'	8"	5'	5 ACRES
A-4	4'	1.5'	8"	5'	8 ACRES
A-6	6'	1.5'	8"	5'	11 ACRES
A-8	8'	1.5'	8"	5'	14 ACRES
A-10	10'	1.5'	8"	5'	18 ACRES
B-4	4'	2'	10"	6'	14 ACRES
B-6	6'	2'	10"	6'	20 ACRES
B-8	8'	2'	10"	6'	25 ACRES
B-10	10'	2'	10"	6'	31 ACRES
B-12	12'	2'	10"	6'	36 ACRES

PAVED FLUME USAGE GUIDELINES

A PAVED FLUME SHOULD BE CONSTRUCTED TO DRAIN CONCENTRATED SURFACE RUNOFF SAFELY DOWN SLOPES WITHOUT CAUSING EROSION. THE DRAINAGE AREA CONTRIBUTING RUNOFF TO A PAVED FLUME SHOULD NOT EXCEED THAT GIVEN IN THE DESIGN CRITERIA ABOVE. THE PAVED FLUME SHOULD BE SIZED TO DRAIN THE PEAK RATE OF RUNOFF WITHOUT OVERTOPPING THE EMBANKMENT AT THE EARTH DIKE ENTRANCE. A 25 YEAR STORM FREQUENCY MAY BE USED TO CALCULATE THE FLOW RATE.

NOTE:FOR ILLUSTRATIVE PURPOSES ONLY

CITY OF TEMPLE
ENGINEERING DEPARTMENT

3210 E. Avenue H, Bldg. A — TEMPLE, TX. 76501-8402

FIG. 9-8 LINED WATERWAY OR OUTLET

SCALE: NTS

P:\Temple\2011\2011-115\Permanent BMP Details.dwg - Lined Waterway

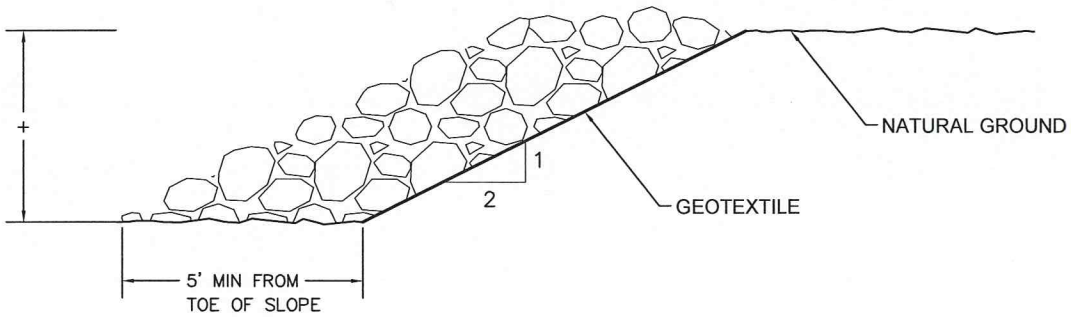

+ = 2 x AVERAGE DIAMETER OF RIPRAP

MINIMUM ROCK DIAMETER = 12"

MAXIMUM SLOPE = 2H : 1V

NOTE:FOR ILLUSTRATIVE PURPOSES ONLY

	CITY OF TEMPLE ENGINEERING DEPARTMENT 3210 E. Avenue H, Bldg. A — TEMPLE, TX. 76501-8402	
	FIG. 9-9 RIPRAP	SCALE: NTS

P:\Temple\2011\2011-115\Permanent BMP Details.dwg - Rip Rap

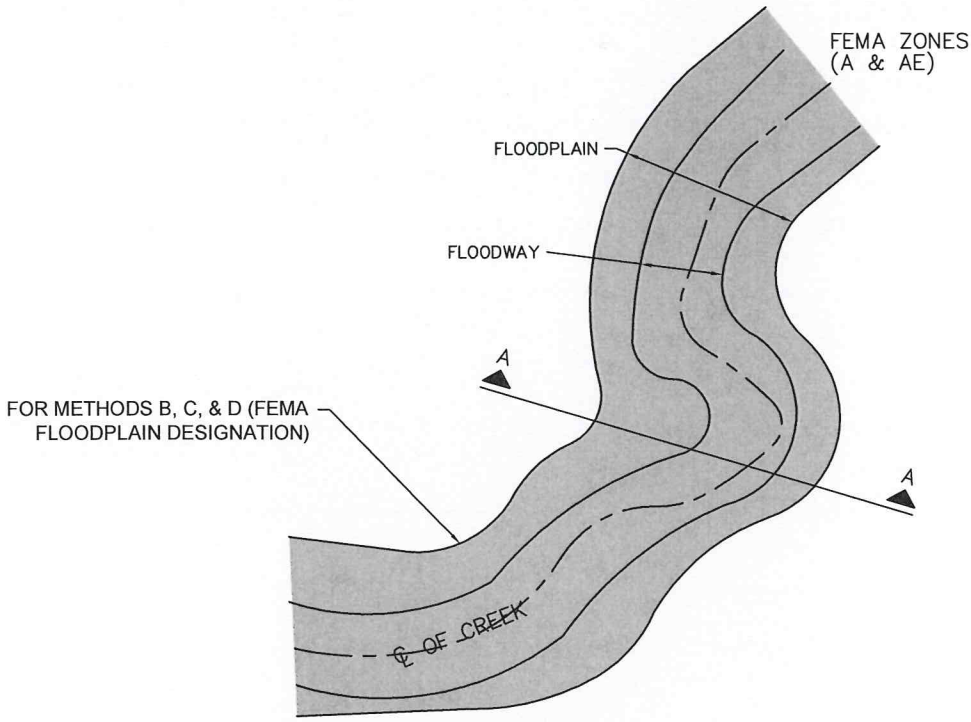

PLAN VIEW

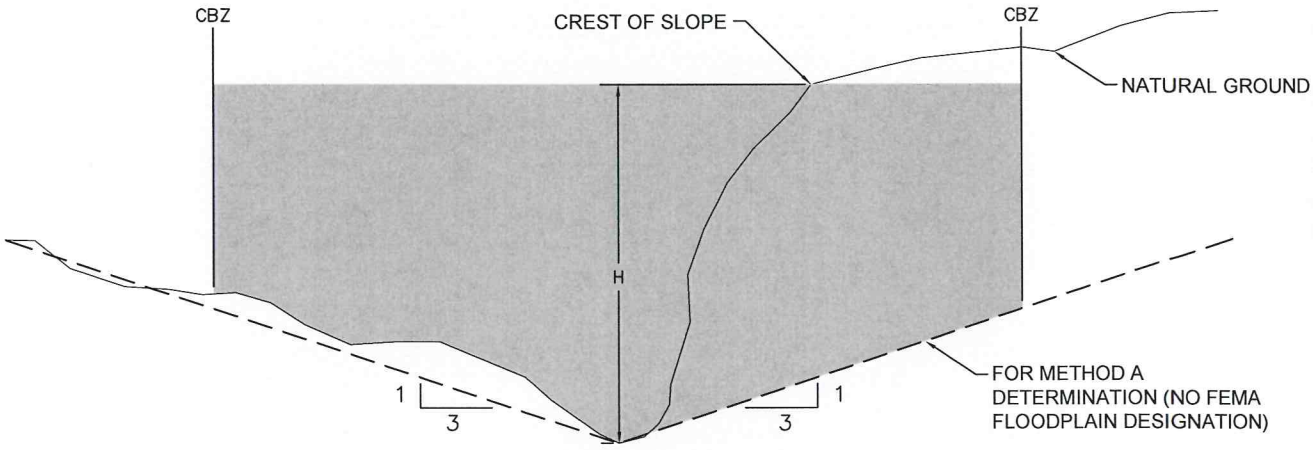

PROFILE
SECTION A-A

NOTE:FOR ILLUSTRATIVE PURPOSES ONLY

CITY OF TEMPLE
ENGINEERING DEPARTMENT

3210 E. Avenue H, Bldg. A TEMPLE, TX. 76501-8402

FIG. 9-10 CREEK BUFFER ZONE

SCALE: NTS

P:\Temple\2011\2011-115\Permanent BMP Details.dwg - Creek Buffer

SWALE SLOPES AS CLOSE
TO ZERO AS DRAINAGE
WILL PERMIT

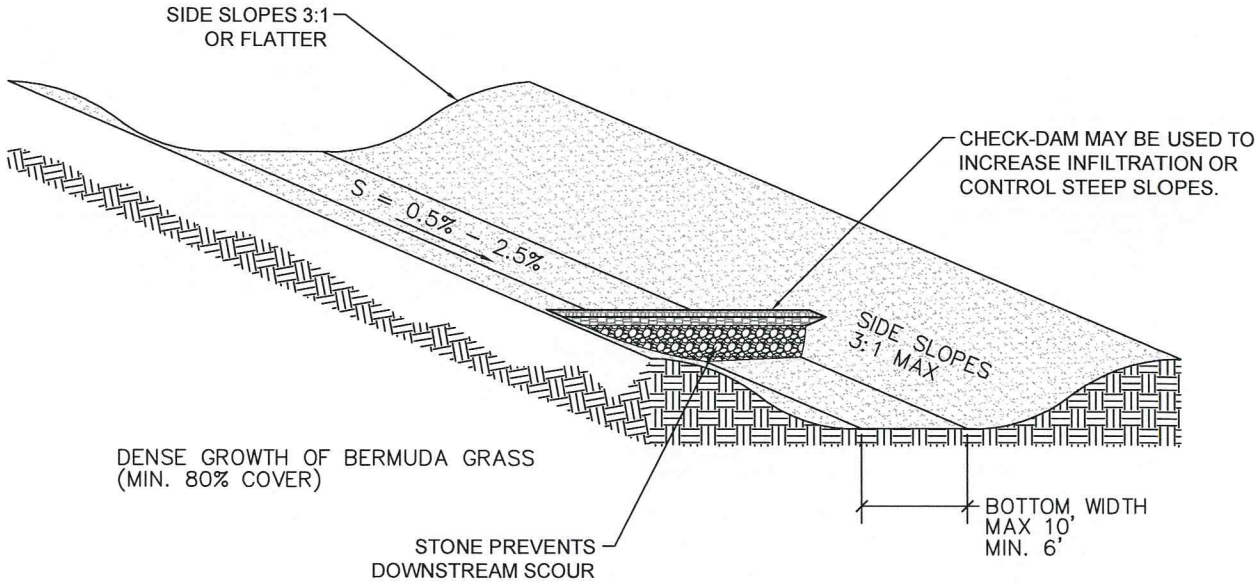

CITY OF TEMPLE
ENGINEERING DEPARTMENT

3210 E. Avenue H, Bldg. A TEMPLE, TX. 76501-8402

FIG. 9-11 VEGETATED SWALES

SCALE: NTS

P:\Temple\2011\2011-115\Permanent BMP Details.dwg - Vegetated Swale

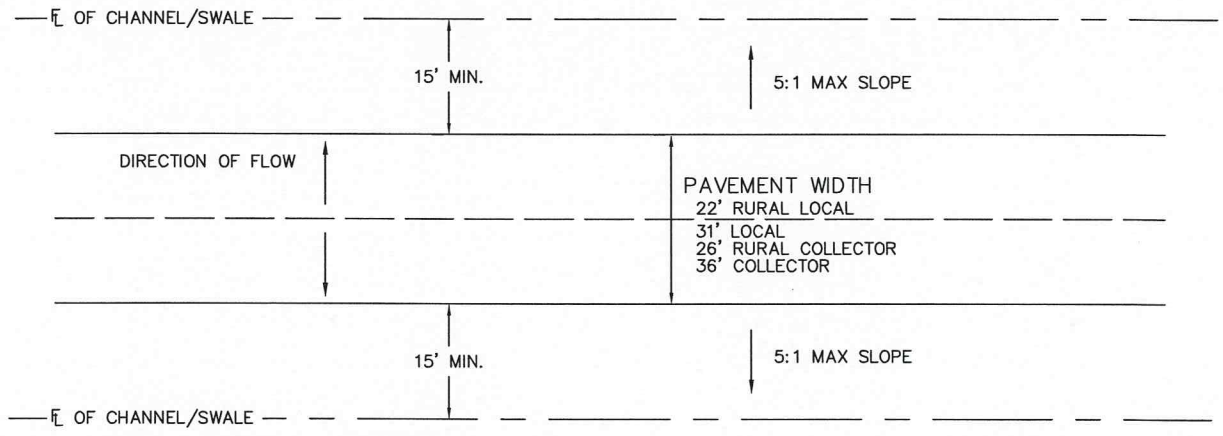

NOTE 1: MINIMUM VEGETATIVE COVER (BERMUDA GRASS) = 80%

VEGETATED FILTER STRIP ALONG ROADWAY

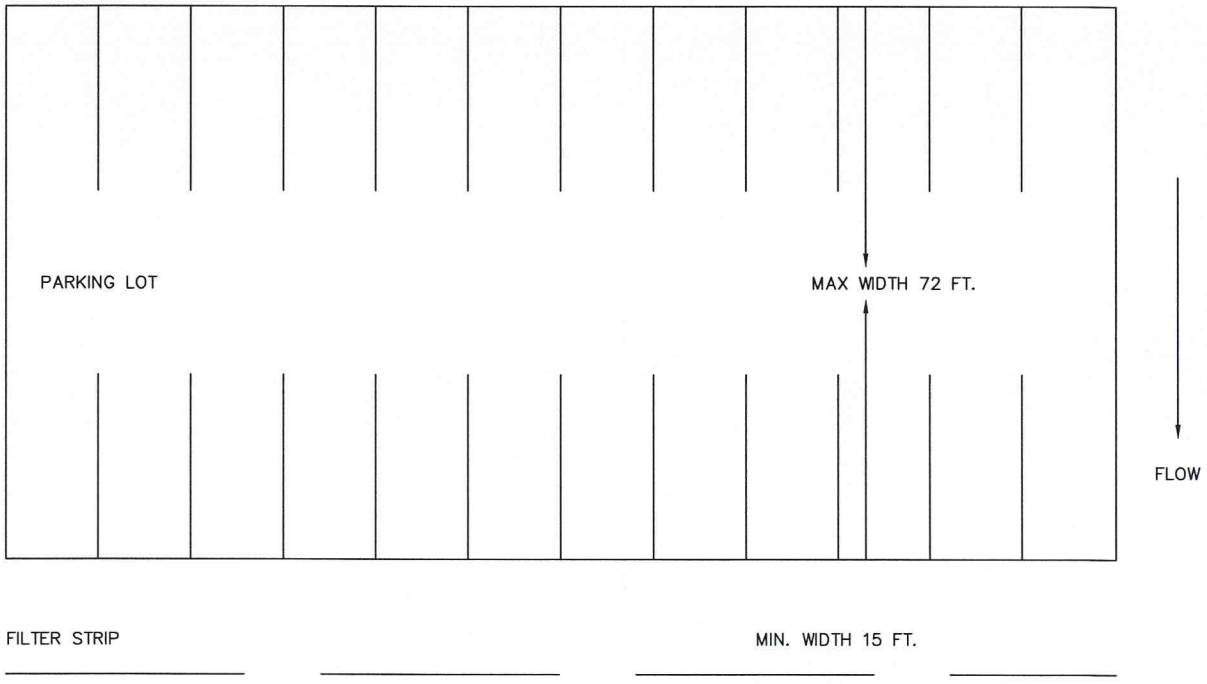

VEGETATED FILTER STRIP ALONG PARKING LOT

CITY OF TEMPLE
ENGINEERING DEPARTMENT

3210 E. Avenue H, Bldg. A TEMPLE, TX. 76501-8402

FIG. 9-12 VEGETATED FILTER STRIPS

SCALE: NTS

P:\Temple\2011\2011-115\Permanent BMP Details.dwg - Vegetated Filter

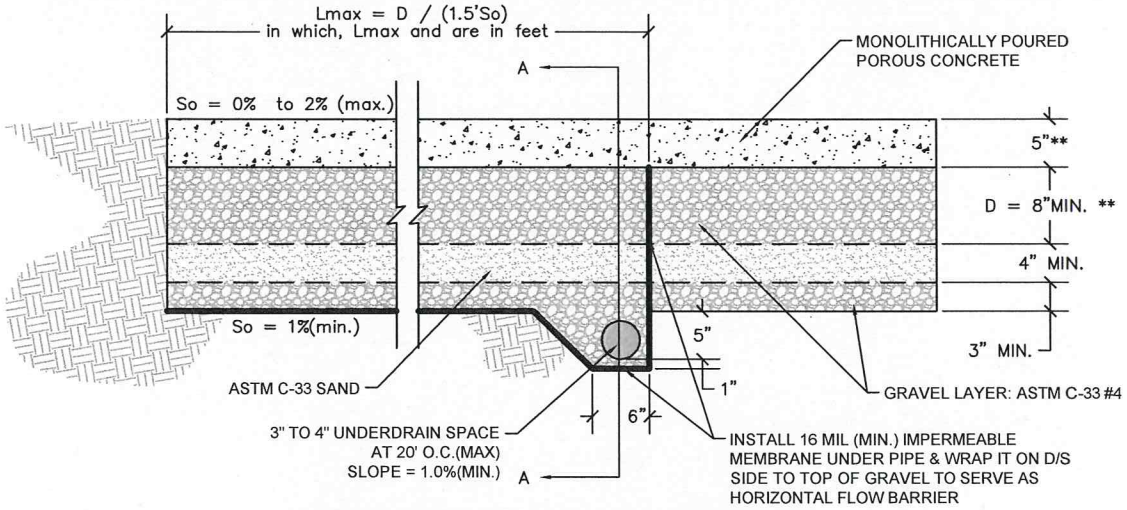

POURED CONCRETE POROUS PAVEMENT (PCP)

SECTION WITH AN UNDERDRAIN SYSTEM

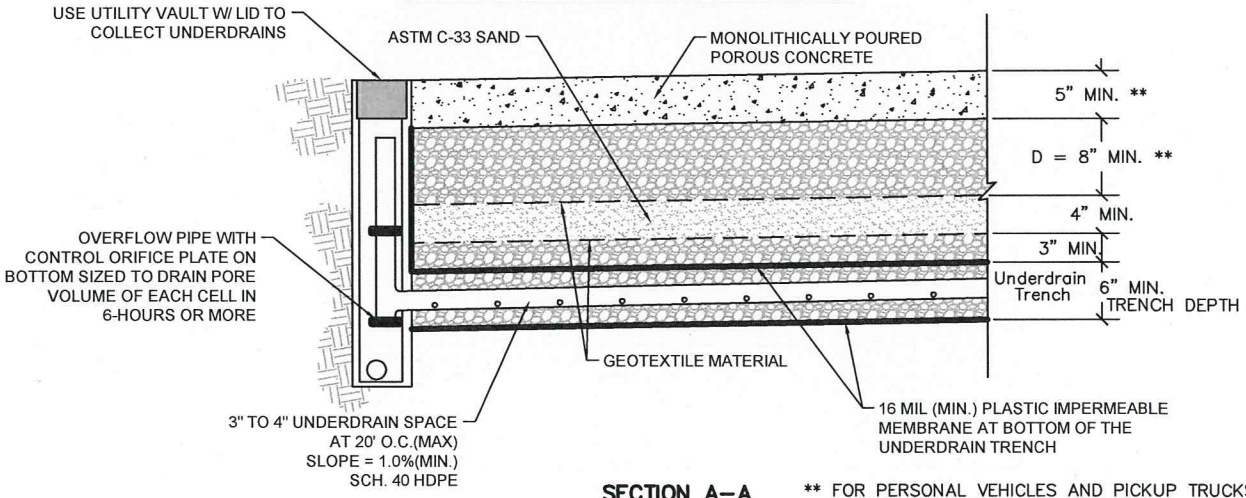

SECTION A–A

** FOR PERSONAL VEHICLES AND PICKUP TRUCKS. THICKER SECTION MAY BE REQUIRED FOR HEAVIER VEHICLES. CONSULT WITH PAVEMENT ENGINEER FOR NEEDED THICKNESS OF CONCRETE SLAB.

SCHEMATIC OF PERMEABLE CONCRETE INSTALLATION (AFTER UCFCD, 2004)

RECOMMENDATIONS FOR PERMEABLE CONCRETE WITHOUT UNDERDRAIN

BASE MATERIALS: BASE MATERIAL MUST CONSIST OF CLEAN, DURABLE, ASTM C–33 NO.4 AGGREGATE 8 INCHES THICK.

GEOTEXTILE FABRIC: A LAYER OF GEOTEXTILE FABRIC COMPLYING WITH THE MINIMUM SPECIFICATIONS LISTED BELOW ARE TO BE PLACED ON TOP OF THE NATURAL SUBSOIL PRIOR TO PLACING BASE MATERIAL. THE FABRIC SHOULD BE EXTENDED UP THE THE NATURAL EARTH SIDES AND OVER THE TOP OF ANY ADJACENT BERM. THE PURPOSE OF THE FABRIC IS TO PREVENT MIGRATION OF FINE MATERIAL FROM SUBSOIL INTO THE GRAVEL.

PROPERTY	TEST METHOD	UNIT	SPECIFICATIONS
Unit Weight		oz/yd^2	8
Filtration Rate		in/sec	0.08
Puncture Strength	ASTM D–751*	lb	125
Mullen Burst Strength	ASTM D–751	psi	400
Tensile Strength	ASTM D–1682	lb	200
Equiv. Opening Size	US Standard Sieve	No.	80

*modified

CITY OF TEMPLE
ENGINEERING DEPARTMENT

3210 E. Avenue H, Bldg. A — TEMPLE, TX. 76501-8402

FIG. 9-13a PERMEABLE AND SEMI-PERVIOUS PAVEMENT PERMEABLE CONCRETE

SCALE: NTS

P:\Temple\2011\2011-115\Permanent BMP Details.dwg - Permeable Concrete

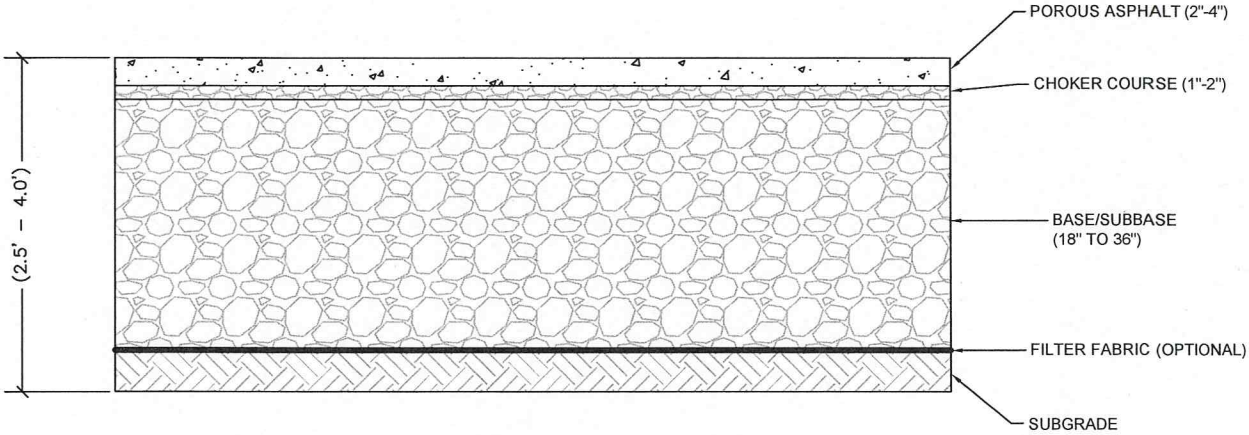

TABLE 1. ASPHALT MIX (ADAMS, 2003)	
SIEVE SIZE	% PASSING
1/2 IN	100
3/8 IN	95
#4	35
#8	15
#16	10
#30	2
PERCENT BITUMINOUS ASPHALT 5.75–6.0% BY WEIGHT	

CITY OF TEMPLE
ENGINEERING DEPARTMENT

3210 E. Avenue H, Bldg. A — TEMPLE, TX. 76501-8402

FIG. 9-13b PERMEABLE AND SEMI-PERVIOUS PAVEMENT
POROUS ASPHALT

SCALE: NTS

P:\Temple\2011\2011-115\Permanent BMP Details.dwg - POROUS ASPH

NOTES:

1) AREA OF PERVIOUS SURFACE TO BE EQUAL TO OR GREATER THAN CONTRIBUTING AREA (i.e. AREA OF ROOF DRAINING TO GUTTER).
2) VEGETATION SHALL CONSIST OF ST. AUGUSTINE OR BERMUDA SOD OR LANDSCAPING CONSISTING OF NATIVE PLANTS WITH MULCH OR COMPOST.

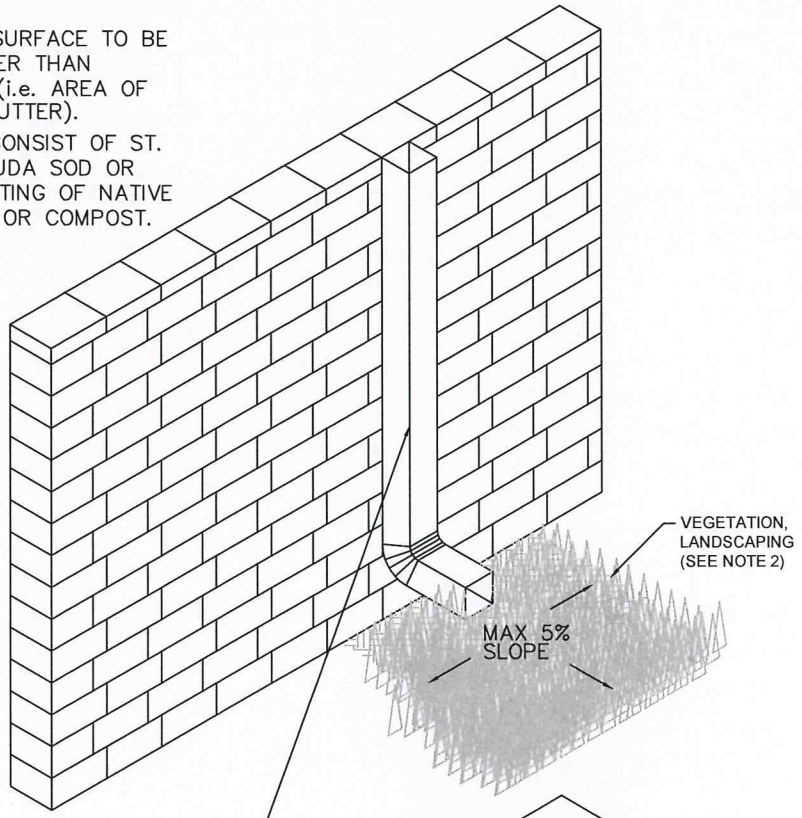

ROOF DRAIN

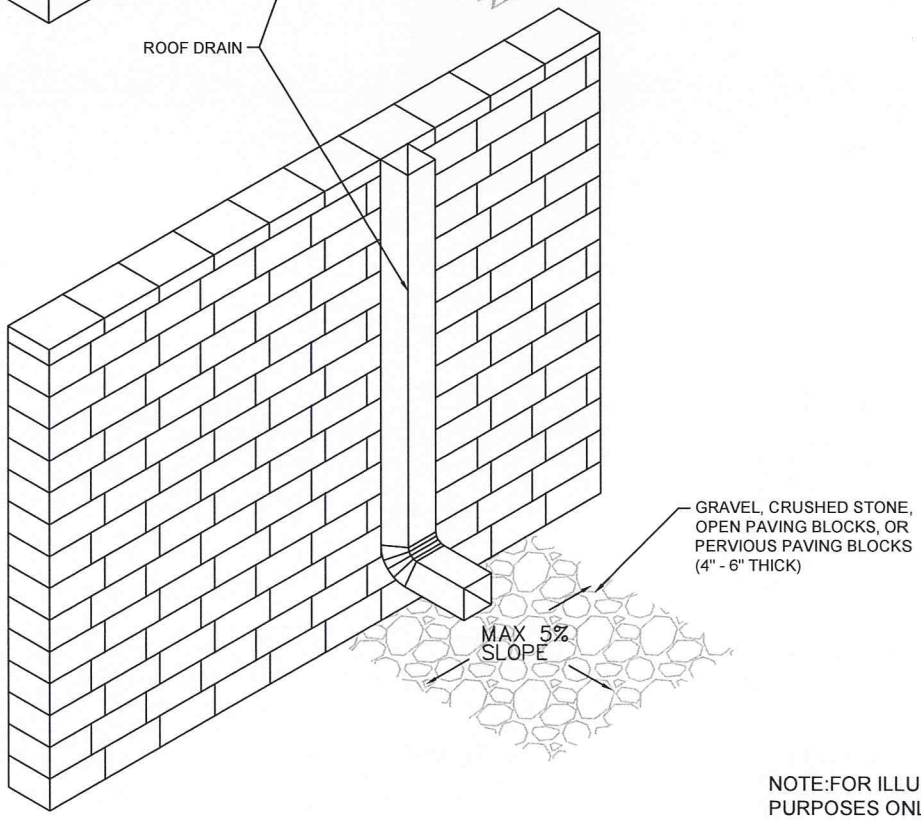

NOTE:FOR ILLUSTRATIVE PURPOSES ONLY

City of Temple	CITY OF TEMPLE ENGINEERING DEPARTMENT 3210 E. Avenue H, Bldg. A — TEMPLE, TX. 76501-8402	
	FIG. 9-14 — DISCHARGE OF ROOF DRAINS TO PERVIOUS SURFACE	SCALE: NTS

P:\Temple\2011\2011-115\Permanent BMP Details.dwg - ROOF DRAIN

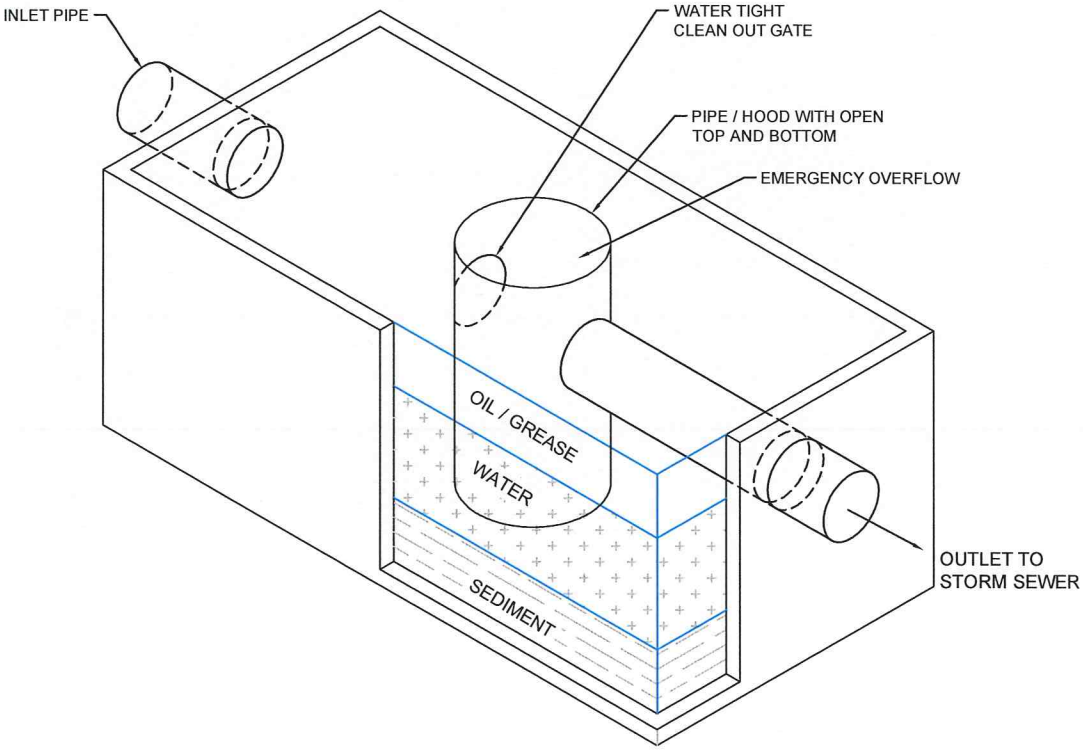

CROSS SECTION VIEW

OIL/GRIT SEPARATOR:
SC - TYPE SEPARATOR

NOTE:FOR ILLUSTRATIVE
PURPOSES ONLY

	CITY OF TEMPLE ENGINEERING DEPARTMENT 3210 E. Avenue H, Bldg. A — TEMPLE, TX. 76501-8402	
	FIG. 9-15a — SUBSURFACE TREATMENT DEVICES SC - TYPE SEPARATOR	SCALE: NTS

P:\Temple\2011\2011-115\Permanent BMP Details.dwg - SC - ISO

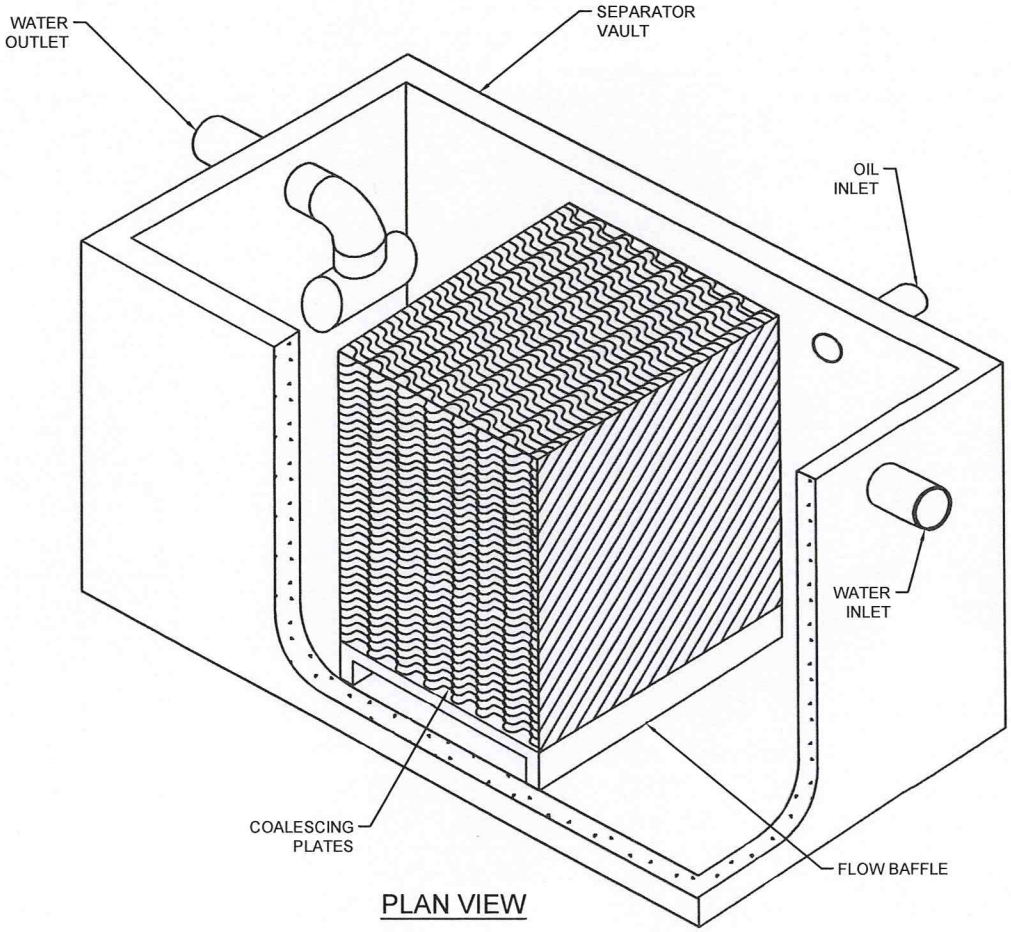

PLAN VIEW

OIL/GRIT SEPARATOR:
CPS - SEPARATOR

CITY OF TEMPLE
ENGINEERING DEPARTMENT

3210 E. Avenue H, Bldg. A TEMPLE, TX. 76501-8402

FIG. 9-15b

SUBSURFACE TREATMENT DEVICES
CPS - SEPARATOR

SCALE: NTS

P:\Temple\2011\2011-115\Permanent BMP Details.dwg - CPS -SEP

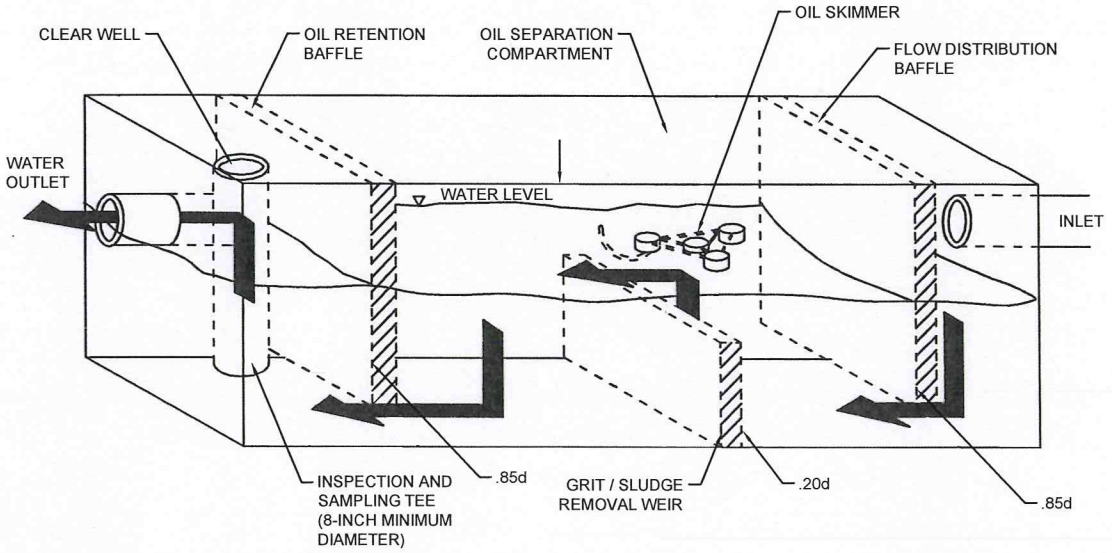

CATCH BASIN VOLUME = 0.5 - 1.5 CUBIC YARDS

"d" = DEPTH OF VAULT

OIL/GRIT SEPARATOR:
API - SEPARATOR

	City of Temple	CITY OF TEMPLE ENGINEERING DEPARTMENT 3210 E. Avenue H, Bldg. A — TEMPLE, TX. 76501-8402
		FIG. 9-15c — SUBSURFACE TREATMENT DEVICES API - SEPARATOR — SCALE: NTS

P:\Temple\2011\2011-115\Permanent BMP Details.dwg - API -SEP

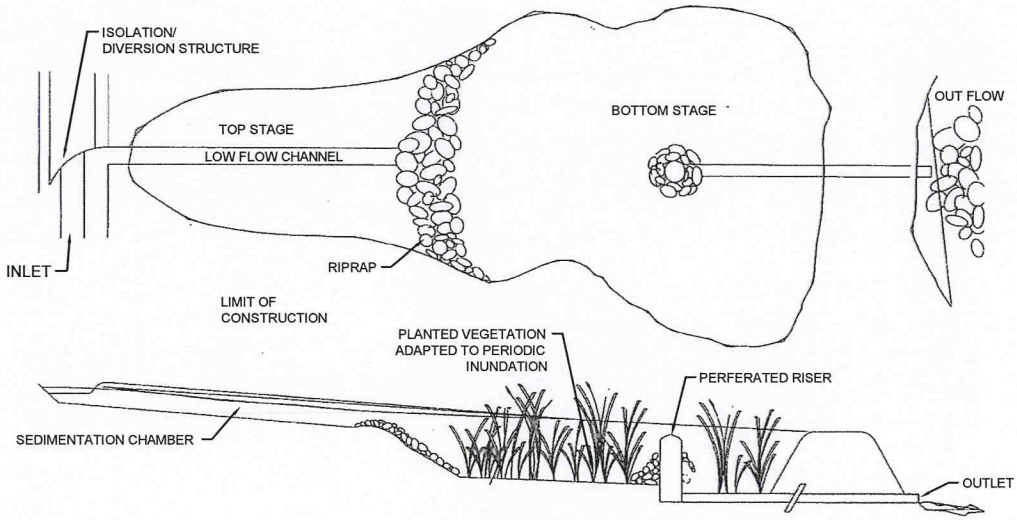

SCHEMATIC OF A TWO STAGE EXTENDED DETENTION BASIN (LCRA, 1998)

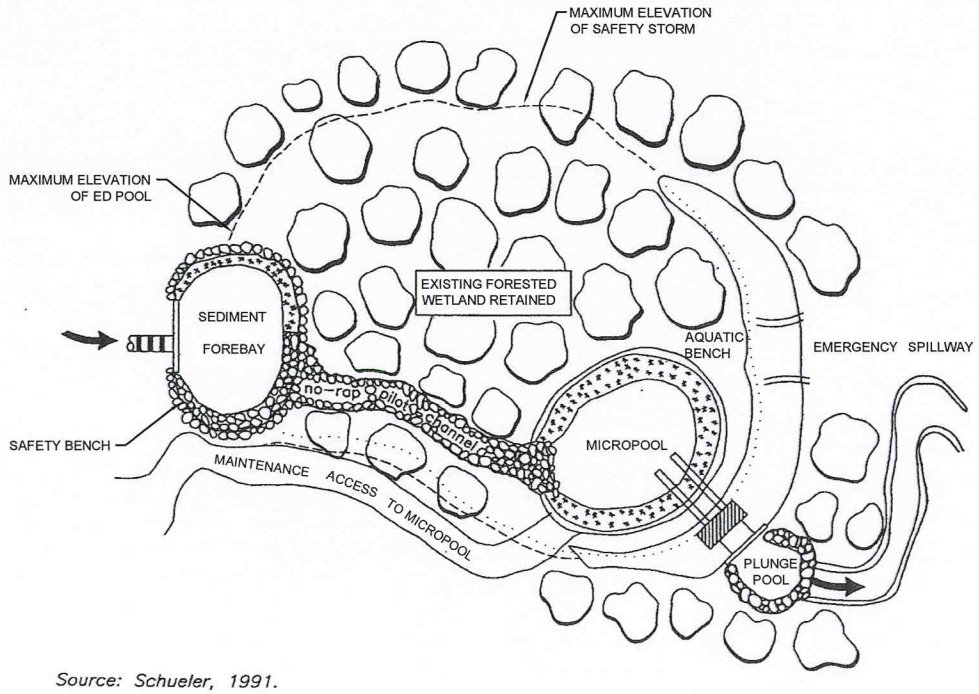

Source: Schueler, 1991.

SCHEMATIC OF AN ENHANCED EXTENDED DETENTION BASIN (SCHUELER, 1992)

NOTE:FOR ILLUSTRATIVE
PURPOSES ONLY

CITY OF TEMPLE
ENGINEERING DEPARTMENT

3210 E. Avenue H, Bldg. A TEMPLE, TX. 76501-8402

FIG. 9-16 EXTENDED DETENTION BASIN

SCALE: NTS

P:\Temple\2011\2011-115\Permanent BMP Details.dwg - BASIN

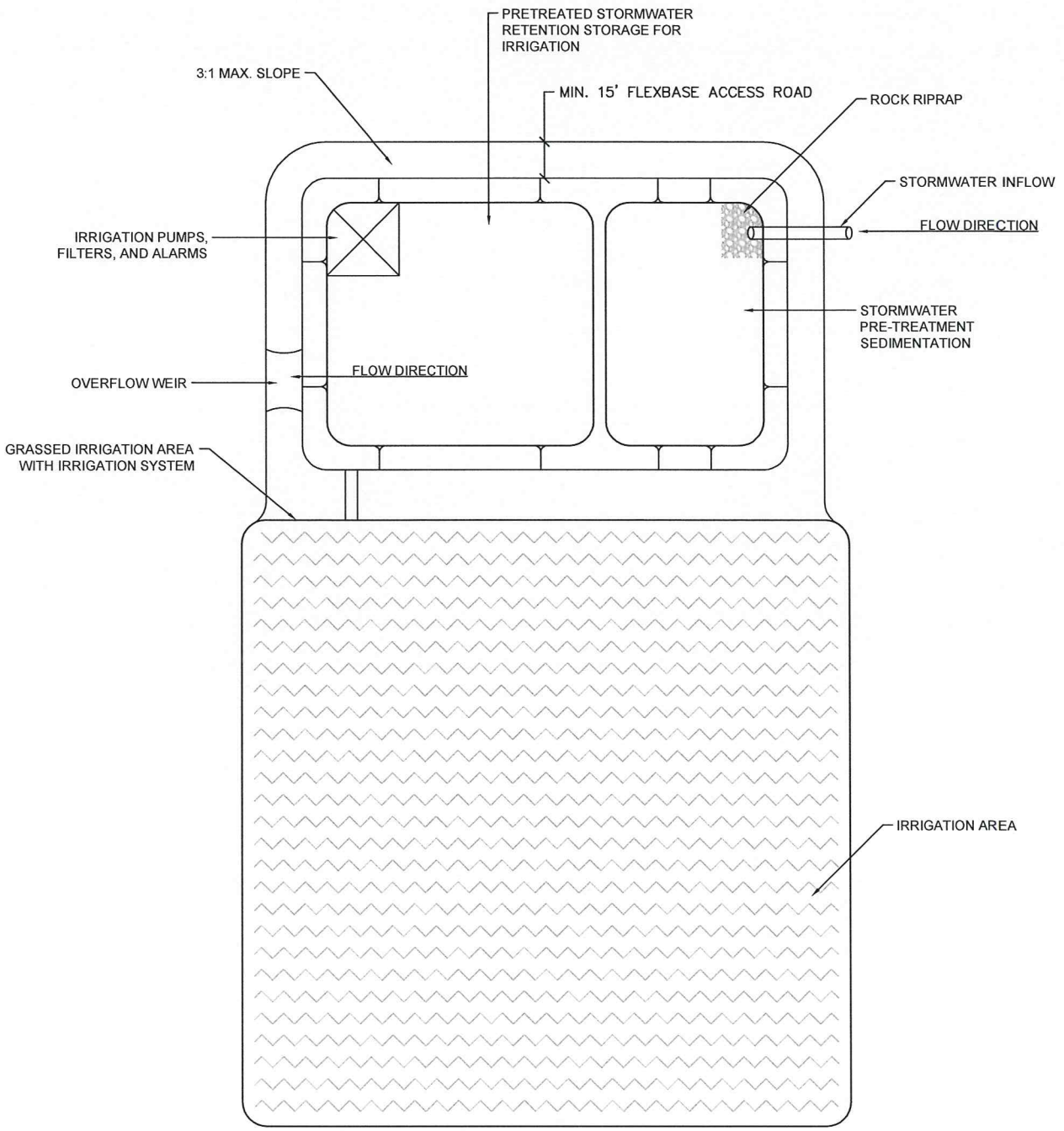

NOTE:FOR ILLUSTRATIVE PURPOSES ONLY

CITY OF TEMPLE
ENGINEERING DEPARTMENT

3210 E. Avenue H, Bldg. A TEMPLE, TX. 76501-8402

FIG. 9-17 RETENTION PONDS

SCALE: NTS

P:\Temple\2011\2011-115\Permanent BMP Details.dwg - R-P

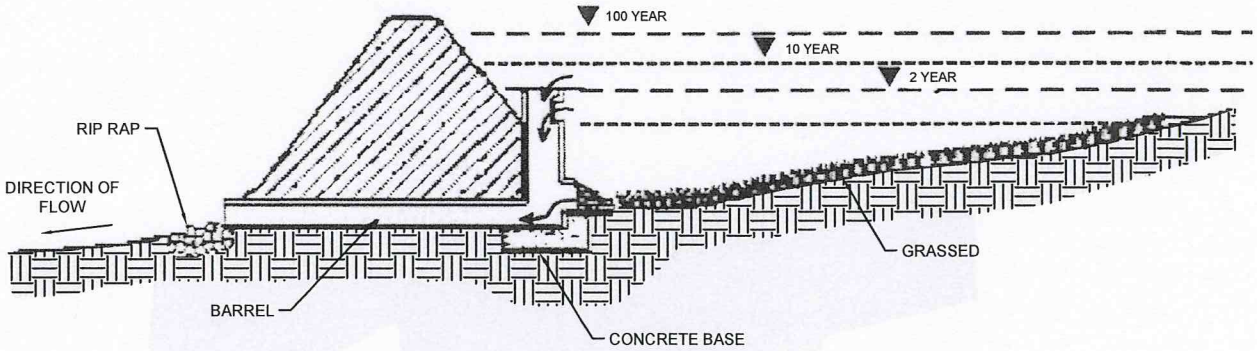

TYPICAL DRY POND
Source: NVPDC, 1992.

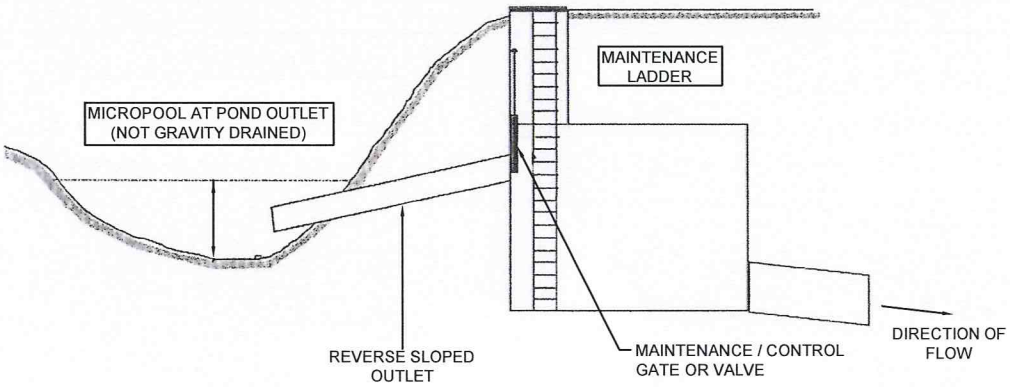

DRY POND MICROPOOL AND REVERSED-SLOPE OUTLET PIPE
Source: Ontario Ministry of the Environment, 1999.

	City of Temple	CITY OF TEMPLE ENGINEERING DEPARTMENT 3210 E. Avenue H, Bldg. A — TEMPLE, TX. 76501-8402
		FIG. 9-18 — DETENTION POND OUTLET FOR EROSION PROTECTION AND STORM WATER QUALITY BENEFITS — SCALE: NTS

P:\Temple\2011\2011-115\Permanent BMP Details.dwg - DRY POND

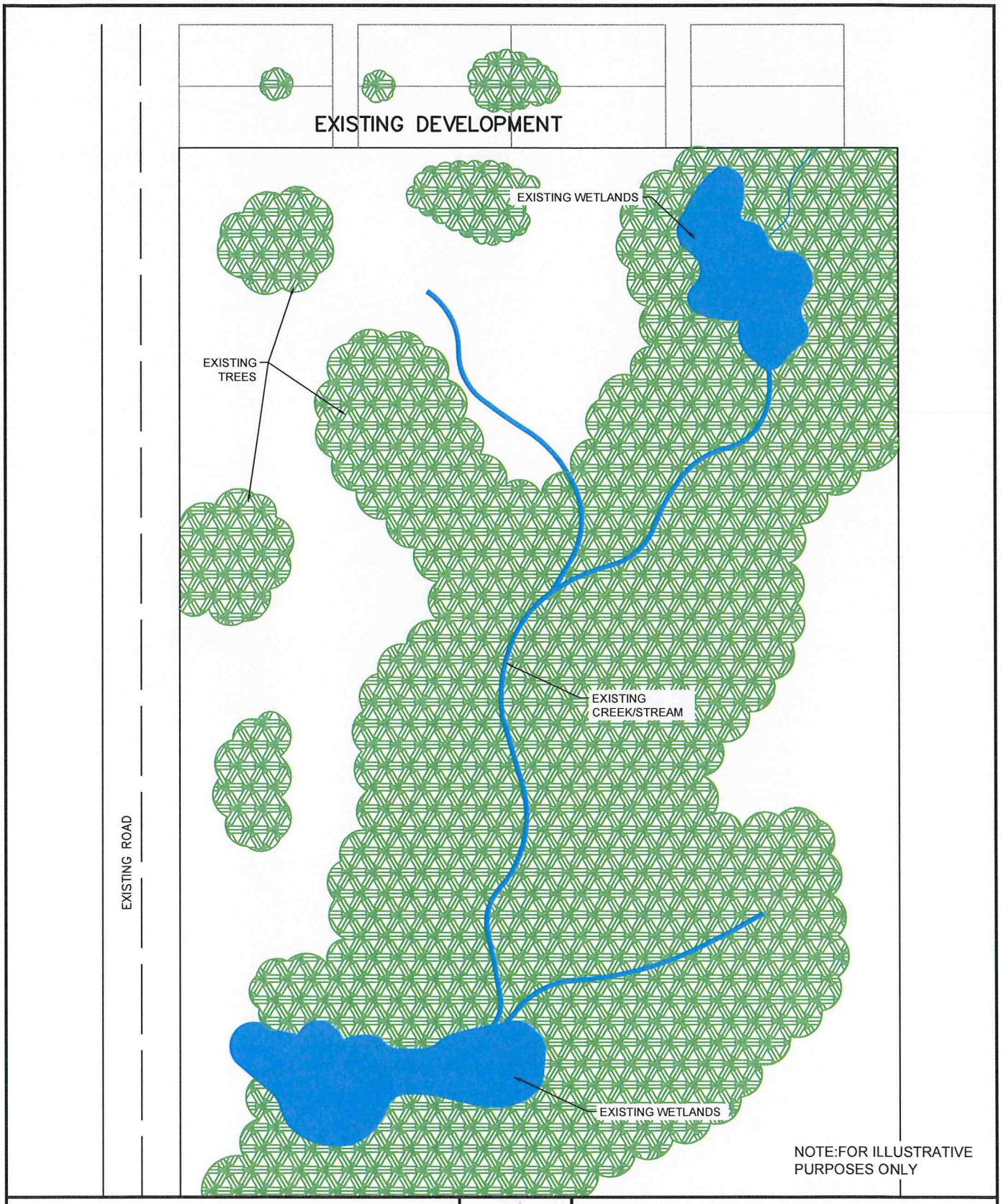

CITY OF TEMPLE
ENGINEERING DEPARTMENT

3210 E. Avenue H, Bldg. A TEMPLE, TX. 76501-8402

FIG. 9-19a CLUSTER DESIGN PRE-PROJECT

SCALE: NTS

P:\Temple\2011\2011-115\Permanent BMP Details.dwg - CLUSTER- PRE

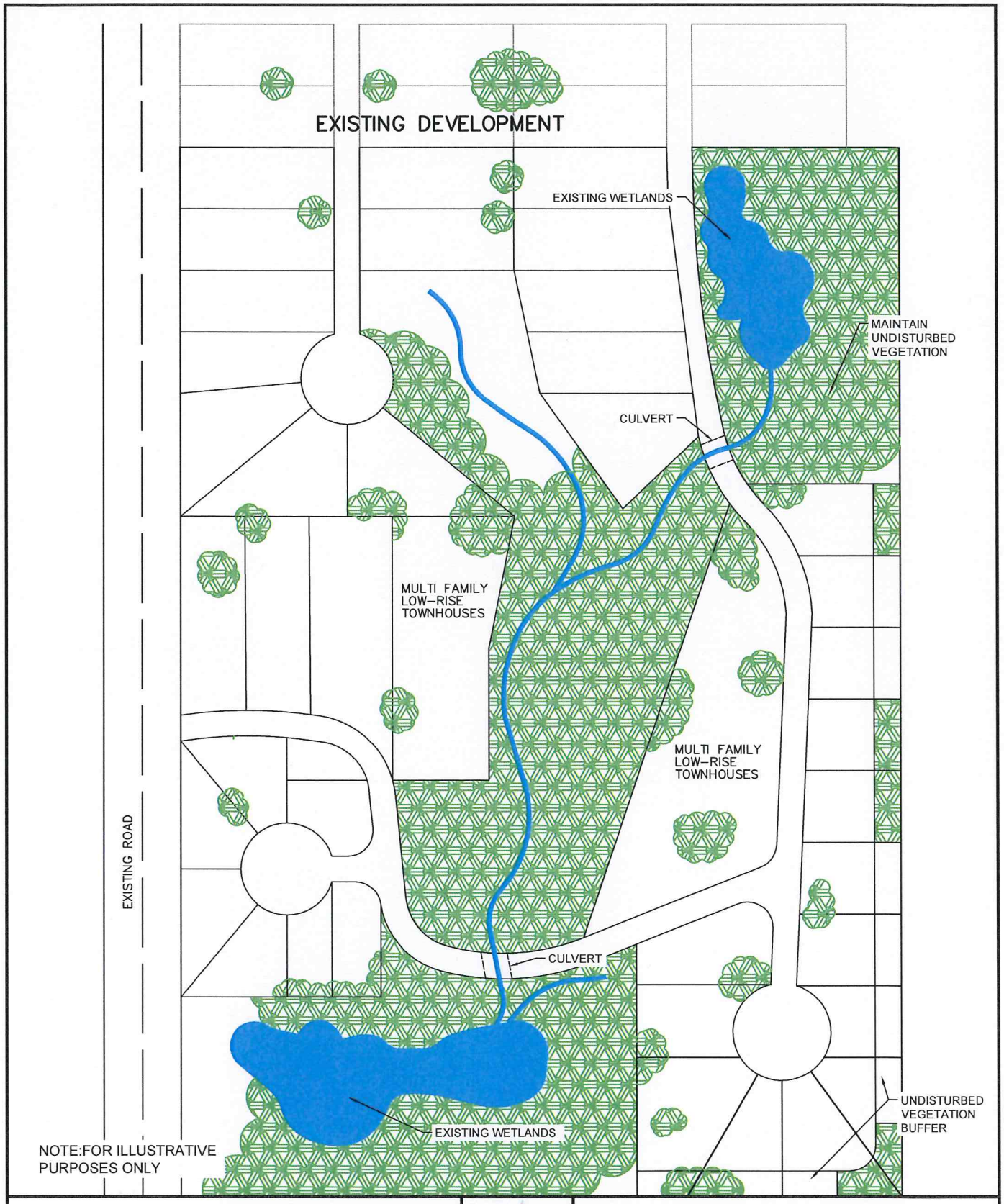

CITY OF TEMPLE
ENGINEERING DEPARTMENT

3210 E. Avenue H, Bldg. A TEMPLE, TX. 76501-8402

FIG. 9-15b CLUSTER DESIGN POST PROJECT

SCALE: NTS

P:\Temple\2011\2011-115\Permanent BMP Details.dwg - CLUSTER- POST

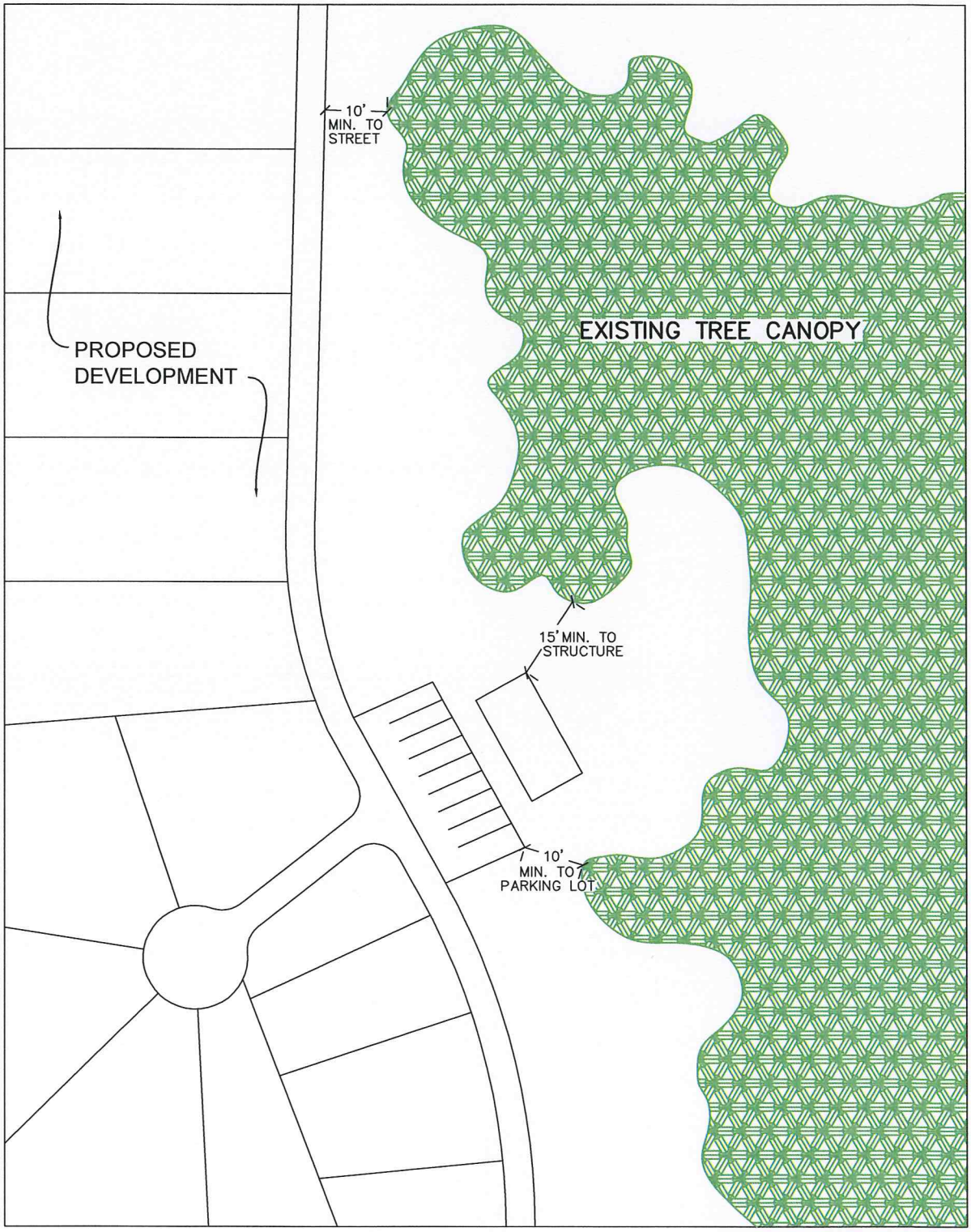

NOTE:FOR ILLUSTRATIVE PURPOSES ONLY

CITY OF TEMPLE
ENGINEERING DEPARTMENT

3210 E. Avenue H, Bldg. A

TEMPLE, TX. 76501-8402

FIG. 9-20 PRESERVATION OF EXISTING TREE CANOPY

SCALE: NTS

P:\Temple\2011\2011-115\Permanent BMP Details.dwg - CANOPY