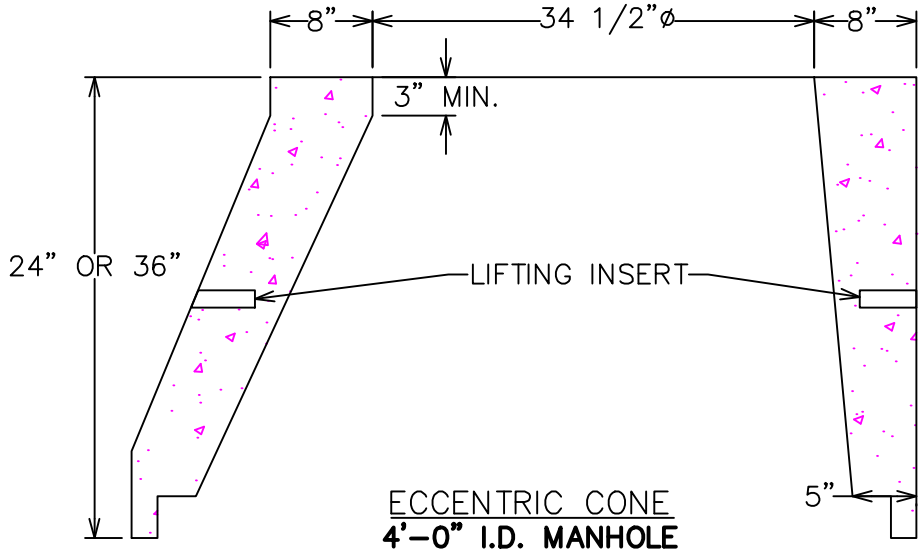

ECCENTRIC CONE
4'–0" I.D. MANHOLE

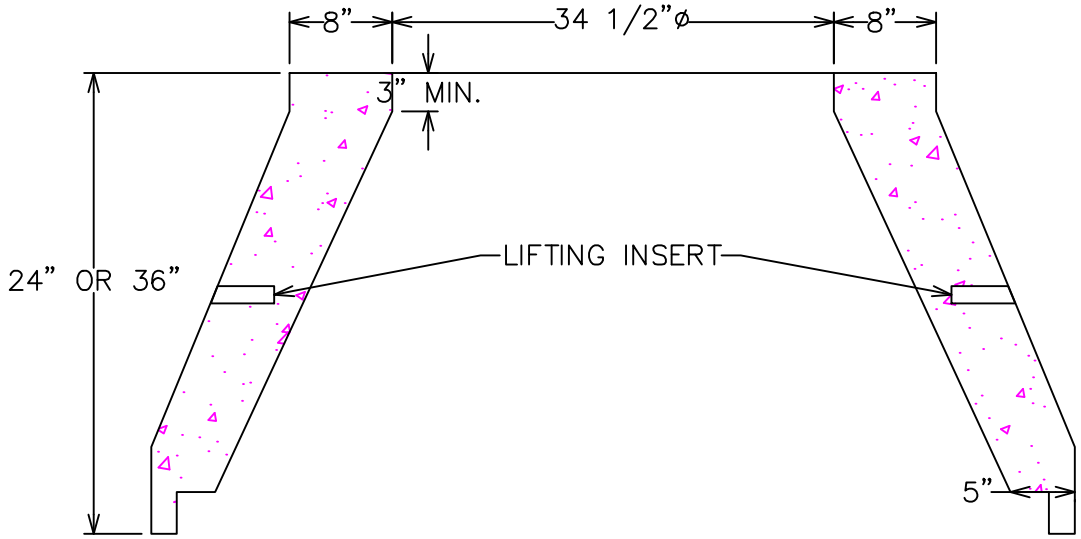

CONCENTRIC CONE
4'–0" I.D. MANHOLE

NOTES:

1. UNLESS OTHERWISE SPECIFIED, USE ECCENTRIC CONES AT ALL LOCATIONS
2. USE CONCENTRIC CONES ONLY AT CITY APPROVED LOCATIONS
3. REINFORCEMENT MEETS OR EXCEEDS ASTM C478–95 REQUIREMENTS
4. REQUIRED 28 DAY CONCRETE IS 4,000–4,500 PSI (WET CONCRETE)
5. MONOLITHIC MANHOLE TO BE DESIGNED BY PROFESSIONAL ENGINEER

SHEET 1 OF 1

APPROVED BY: Anthony Daniel, P.E.	DSAB APPROVED DATE: 8 September 2005	City of Temple	CITY OF TEMPLE ENGINEERING DEPARTMENT 3210 E. Avenue H, Bldg. A — TEMPLE, TX. 76501-8402
DRAWN BY: Chris Peal	FILE NAME: 4' I.D. MANHOLE CONE.dwg		MANHOLE CONE DETAIL — SCALE: 1"=15'

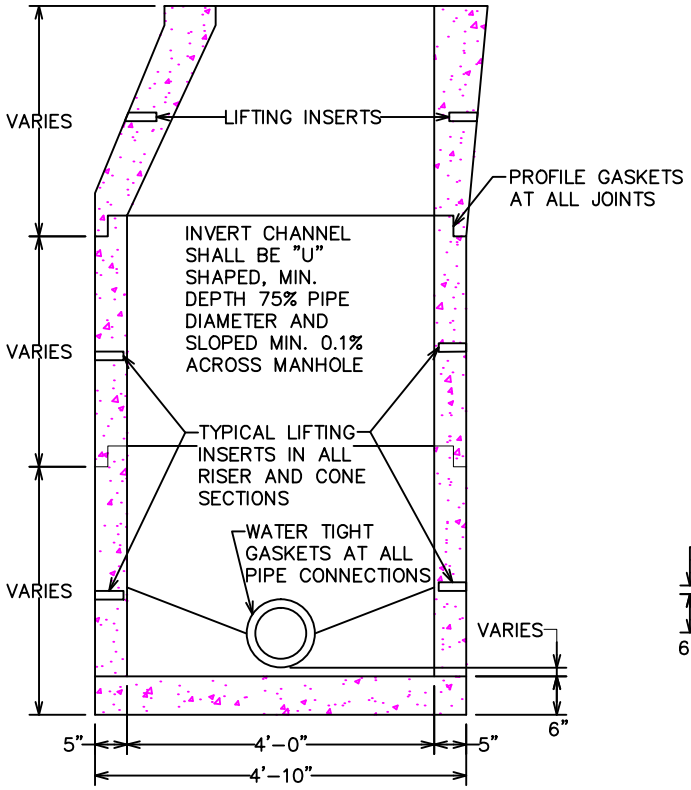

4' I.D. MANHOLE–REGULAR BASE

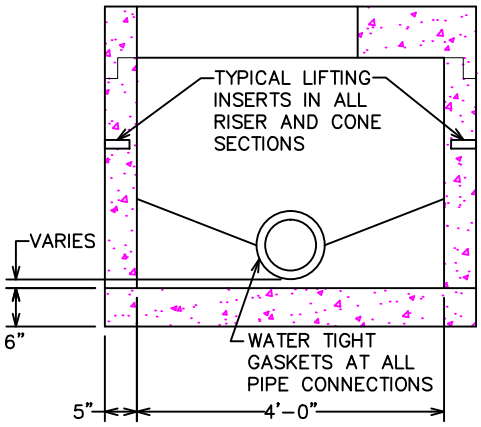

FLATTOP ILLUSTRATION
FOR SHALLOW MANHOLE

NOTE:

1. REINFORCEMENT MEETS OR EXCEEDS ASTM C478–95 REQUIREMENTS

2. REQUIRED 28 DAY CONCRETE STRENGTH RANGE IS 4,000 – 4,500 PSI (WET POURED CONCRETE)

3. ALL SEALS BETWEEN WASTEWATER LINES AND MANHOLES SHALL BE WATERTIGHT, SIZE–ON–SIZE RESILIENT CONNECTIONS ALLOWING FOR DIFFERENTIAL SETTLEMENT AND MEETING ASTM C923

4. ALL MANHOLE INVERTS SHALL:
   A. BE PROVIDED WITH A "U" SHAPED CHANNEL WITH A MINIMUM OF 0.1 FT FALL ACROSS THE MANHOLE. PROVIDE AS MUCH AS POSSIBLE FALL FOR A SMOOTH CONTINUATION OF THE INLET AND OUTLET PIPES
   B. ENSURE ALL BENCH PROVIDED ABOVE THE CHANNEL SHALL BE SLOPED AT A MINIMUM OF 1/2" PER FT TOWARDS THE FLOW LINE

5. WHEN EXISTING CONDITIONS REQUIRE AN EXTENDED CONCRETE BASE, REFER TO DESIGN ENGINEER

SHEET 1 OF 1

APPROVED BY: Anthony Daniel, P.E.	DSAB APPROVED DATE: 8 September 2005	City of Temple	CITY OF TEMPLE ENGINEERING DEPARTMENT 3210 E. Avenue H, Bldg. A — TEMPLE, TX. 76501-8402
DRAWN BY: Chris Peal	FILE NAME: 4'I.D.MANHOLE-REGULAR.dwg		4'-0" MANHOLE REGULAR BASE DETAIL — SCALE: 1"=30'

MANHOLE BOTTOM

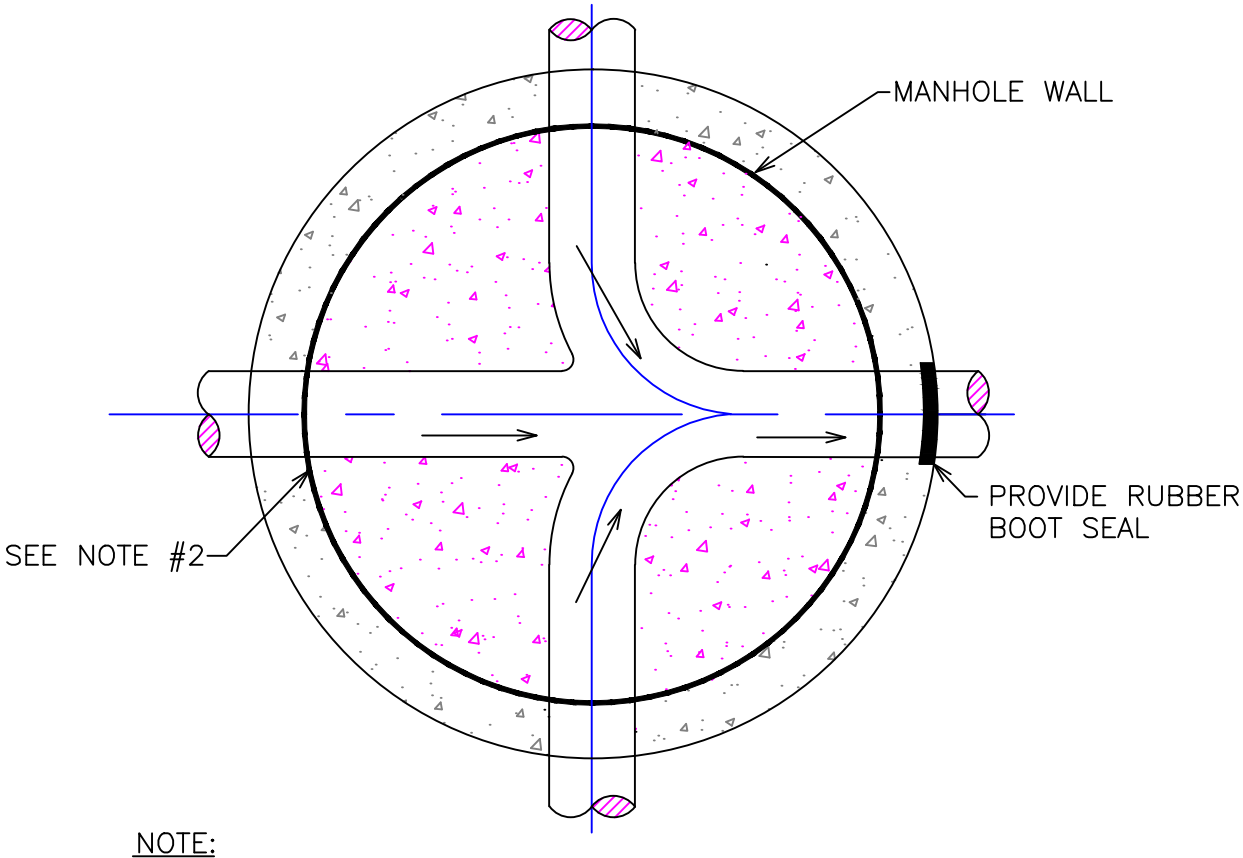

NOTE:

1. MANHOLE BOTTOM SHALL BE SHAPED WITH CONCRETE GROUT TO DRAIN TO CENTER, 1/2" PER FOOT MIN.
2. MIN. DROP OF 0.1ft ACROSS MANHOLE INVERT
3. INSTALL WATER TIGHT SEALS AT ALL PIPE PENETRATION THROUGH MANHOLE STRUCTURE
4. ALL SEALS BETWEEN WASTEWATER LINES AND MANHOLE SHALL BE WATER TIGHT, SIZE-ON-SIZE RESILIENT CONNECTIONS ALLOWING FOR DIFFERENTIAL SETTLEMENT AND MEETING ASTM C923.

SHEET 1 OF 1

APPROVED BY: Anthony Daniel, P.E.	DSAB APPROVED DATE: 10 MARCH 2011	City of Temple	CITY OF TEMPLE ENGINEERING DEPARTMENT 3210 E. Avenue H, Bldg. A TEMPLE, TX. 76501-8402
DRAWN BY: Chris Peal	FILE NAME: MANHOLE BOTTOM DETAILS		MANHOLE BOTTOM DETAILS — SCALE: N.T.S.

DROP MANHOLE

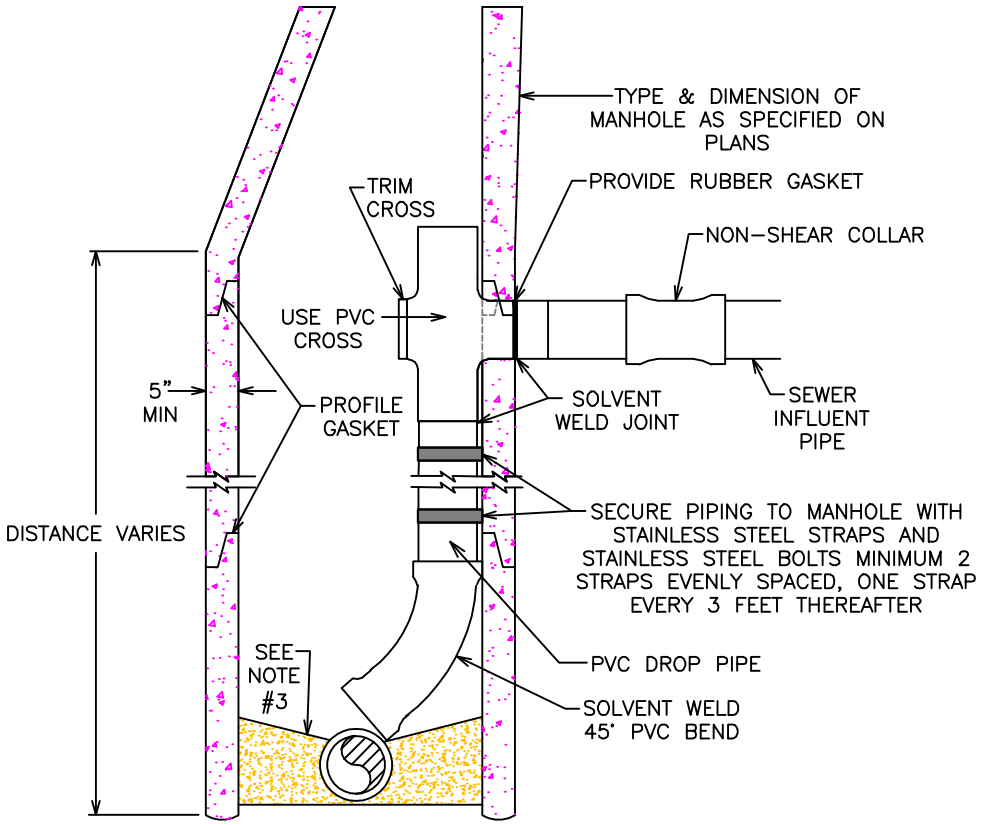

FOR 6" TO 10" DIA. INFLUENT PIPE

NOTE:

1. USE PVC CROSS FOR DROP CONNECTION

2. IF A PRE-CAST SECTION IS INSTALLED TO FORM THE BOTTOM BASE, INSTALL WATER TIGHT SEALS AT ALL PIPE PENETRATIONS THROUGH MANHOLE STRUCTURE

3. ALL SEALS BETWEEN SEWER LINES AND MANHOLES SHALL BE WATERTIGHT, SIZE-ON-SIZE RESILIENT CONNECTIONS ALLOWING FOR DIFFERENTIAL SETTLEMENT AND MEETING ASTM C923

4. TRIM PVC CROSS FOR EASE OF MAINTENANCE

5. A DROP MANHOLE IS REQUIRED WHEN THE INFLUENT FLOWLINE IS 30" OR HIGHER THAN THE FLOWLINE OUT

6. ALL FITTINGS INSIDE MANHOLE SHALL BE SDR 35 SOLVENT WELD

7. ALL PIPE INSIDE MANHOLE FOR DROP CONNECTION SHALL BE SDR 26 MINIMUM

8. 12 INCH DIAMETER AND LARGER TO BE DESIGNED BY ENGINEER

SHEET 1 OF 1

APPROVED BY: Anthony Daniel, P.E.	DSAB APPROVED DATE: 8 September 2005	CITY OF TEMPLE ENGINEERING DEPARTMENT	
DRAWN BY: Chris Paul	FILE NAME: PRECAST CONCRETE MANHOLE WITH DROP CONNECTION .dwg	3210 E. Avenue H, Bldg. A — TEMPLE, TX. 76501-8402	
		PRE-CAST MANHOLE WITH DROP CONNECTION DETAIL	SCALE: N.T.S.

PRECAST CONCRETE MANHOLE

OVER AN EXISTING SEWER LINE

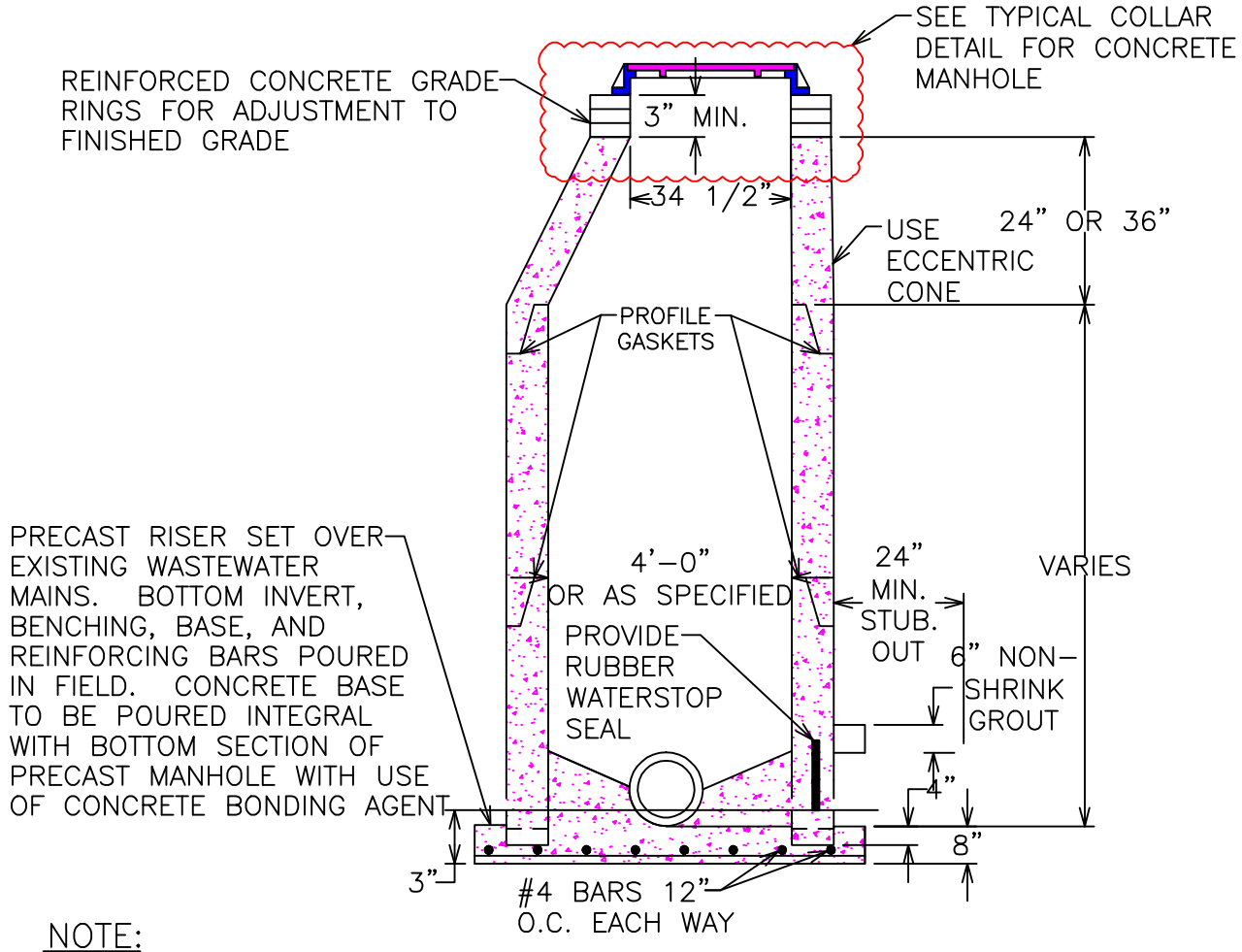

NOTE:

1. IF A PRE-CAST SECTION IS INSTALLED TO FORM THE BOTTOM BASE, INSTALL WATER TIGHT SEALS AT ALL PIPE PENETRATIONS THROUGH MANHOLE STRUCTURE.
2. ALL SEALS BETWEEN SEWER LINES AND MANHOLES SHALL BE WATERTIGHT, SIZE-ON-SIZE RESILIENT CONNECTIONS ALLOWING FOR DIFFERENTIAL SETTLEMENT AND MEETING ASTM C923.
3. USE CONCRETE BONDING AGENT WHEN POURING BASE ON PRE-CAST "DOG HOUSE" MANHOLE.
4. ALL MANHOLES WILL HAVE ECCENTRIC CONES WITH 32" DIA. LIDS.

(TYPE 3 – PRECAST CONCRETE CONE)
TONGUE & GROOVE JOINTS ASTM C478 OR
MONOLITHIC PRECAST

SHEET 1 OF 1

APPROVED BY: Anthony Daniel, P.E.	DSAB APPROVED DATE: 8 September 2005	City of Temple	CITY OF TEMPLE ENGINEERING DEPARTMENT 3210 E. Avenue H, Bldg. A — TEMPLE, TX. 76501-8402
DRAWN BY: Chris Peal	FILE NAME: PRECAST CONCRETE MANOLE		PRE-CAST MANHOLE DETAIL — SCALE: N.T.S.

TYPICAL SECTION OF SHALLOW MANHOLE

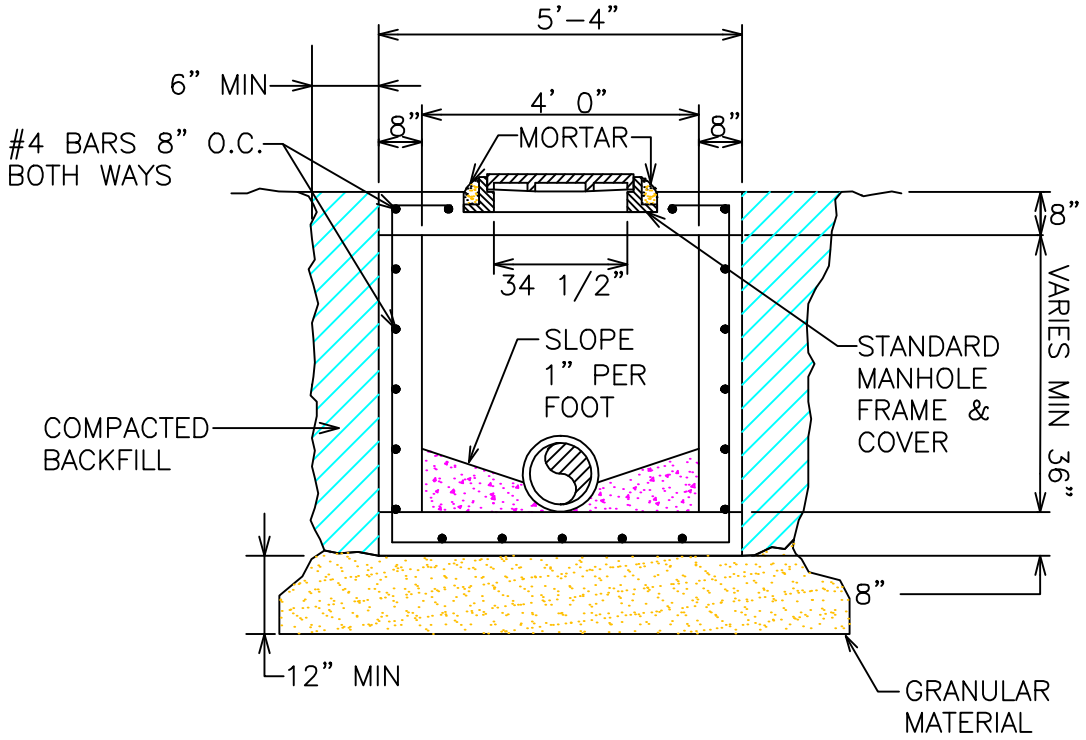

NOTE:

1. INVERT CHANNEL SHALL BE "U" SHAPED. MINIMUM DEPTH 75% OF PIPE DIAMETER AND SLOPED MINIMUM OF 0.1' ACROSS MANHOLE

2. MANHOLE SHALL BE MINIMUM DEPTH UNLESS OTHERWISE SPECIFIED BY A REGISTERED PROFESSIONAL ENGINEER

3. CONCRETE SHALL HAVE MINIMUM 4,000 PSI COMPRESSIVE STRENGTH AT 28 DAYS

4. WASTEWATER LINES LESS THAN OR EQUAL TO 24" DIAMETER – USE 4' I.D. MANHOLE
   WASTEWATER LINES GREATER THAN 24" – REFER TO DESIGN ENGINEER

SHEET 1 OF 1

APPROVED BY: Anthony Daniel, P.E.	DSAB APPROVED DATE: 8 September 2005	City of Temple	CITY OF TEMPLE ENGINEERING DEPARTMENT 3210 E. Avenue H, Bldg. A — TEMPLE, TX. 76501-8402
DRAWN BY: Chris Peal	FILE NAME: SHALLOW MANHOLE.dwg		SHALLOW MANHOLE DETAIL — SCALE: N.T.S.

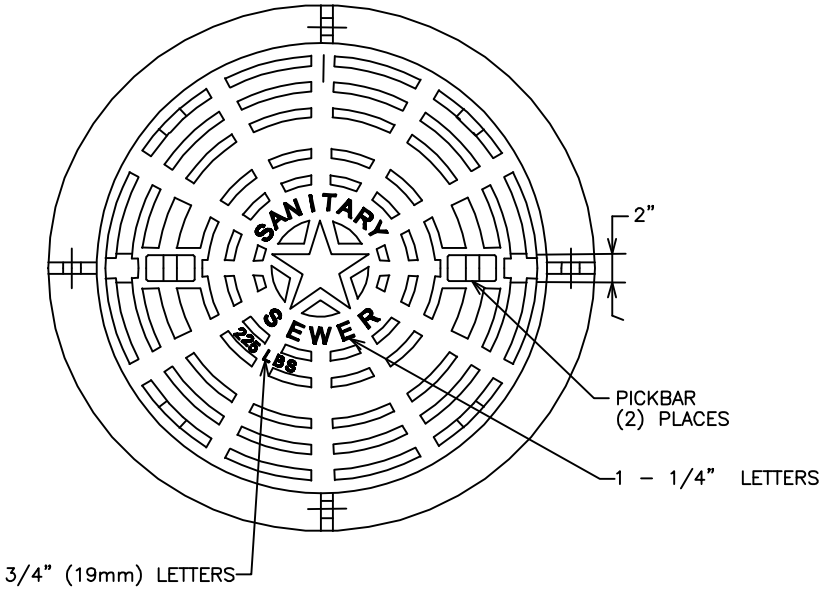

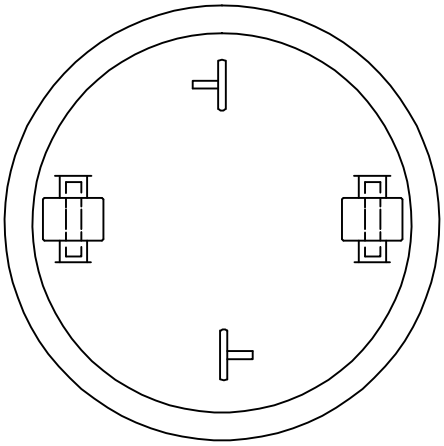

BOTTOM VIEW

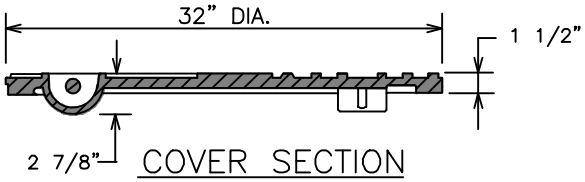

COVER SECTION

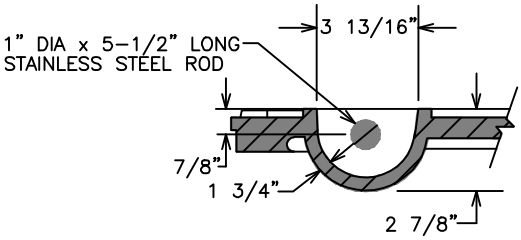

PICKBAR DETAIL

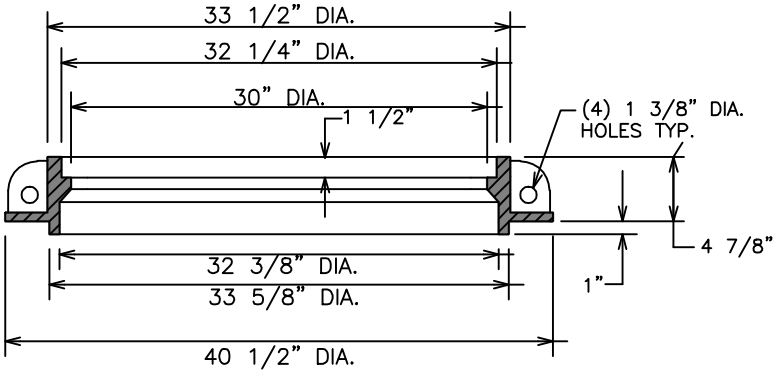

FRAME SECTION

NOTES:

1. LOAD RATING – HEAVY DUTY
2. MATERIAL AND ESTIMATED WEIGHT:
   COVER – DUCTILE IRON, ASTM A48 CL35 – 225 LBS.
   FRAME – GREY IRON, ASTM A48 CL35 – 225 LBS.
3. SEE GENERAL SEWER NOTES

SHEET 1 OF 1

APPROVED BY: Anthony Daniel, P.E.	D&AB APPROVED DATE 8 September 2005	City of Temple	CITY OF TEMPLE ENGINEERING DEPARTMENT 3210 E. Avenue H, Bldg. A — TEMPLE, TX. 76501-8402
DRAWN BY: Chris Peal	FILE NAME: STANDARD DUCTILE IRON MANHOLE FRAME & COVER.dwg		D.I. MANHOLE FRAME & COVER DETAIL — SCALE: N.T.S.

TYPICAL COLLAR DETAIL FOR CONCRETE MANHOLE

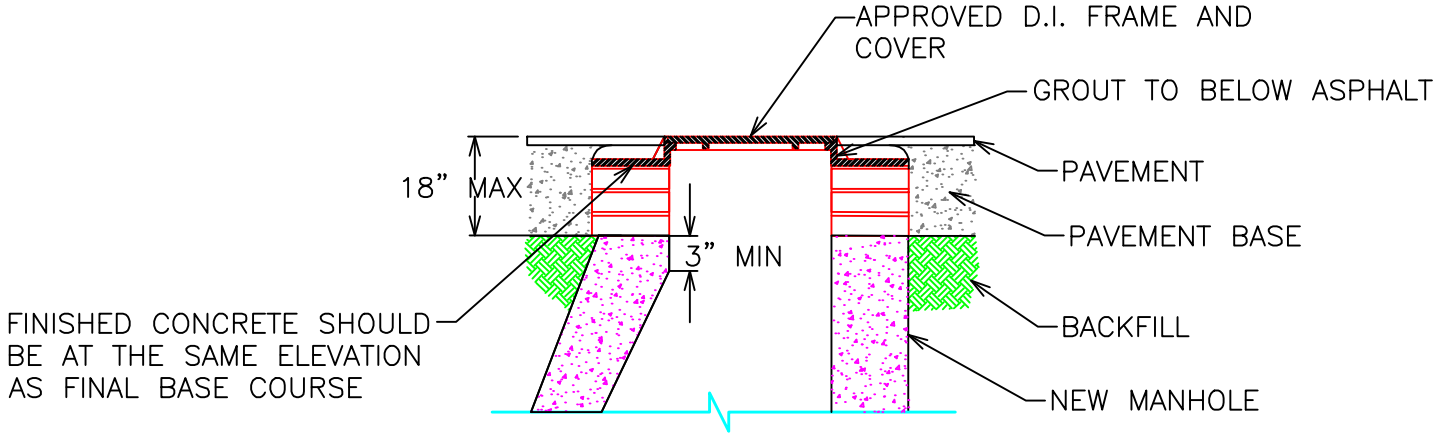

PAVED AREAS

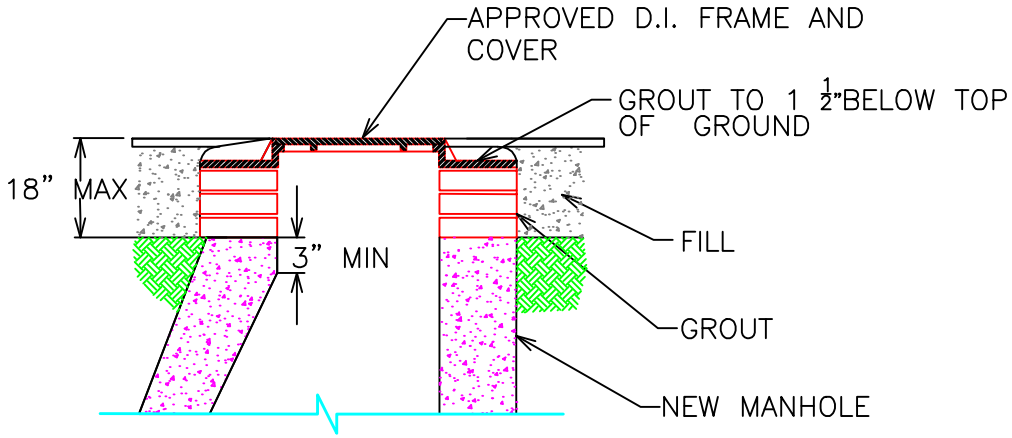

NON–PAVED AREAS

NOTE:

1. USE REINFORCED CONCRETE GRADE RINGS WITH GROUT TO ACHIEVE SPECIFIED ELEVATION AS REQUIRED

SHEET 1 OF 1

APPROVED BY: Anthony Daniel, P.E.	DSAB APPROVED DATE: 8 September 2005	City of Temple	CITY OF TEMPLE ENGINEERING DEPARTMENT 3210 E. Avenue H, Bldg. A — TEMPLE, TX. 76501-8402
DRAWN BY: Chris Peal	FILE NAME: TYPICAL COLLAR DETAIL FOR CONCRETE MANHOLE.dwg		COLLAR DETAIL FOR CONCRETE MANHOLE — SCALE: N.T.S.

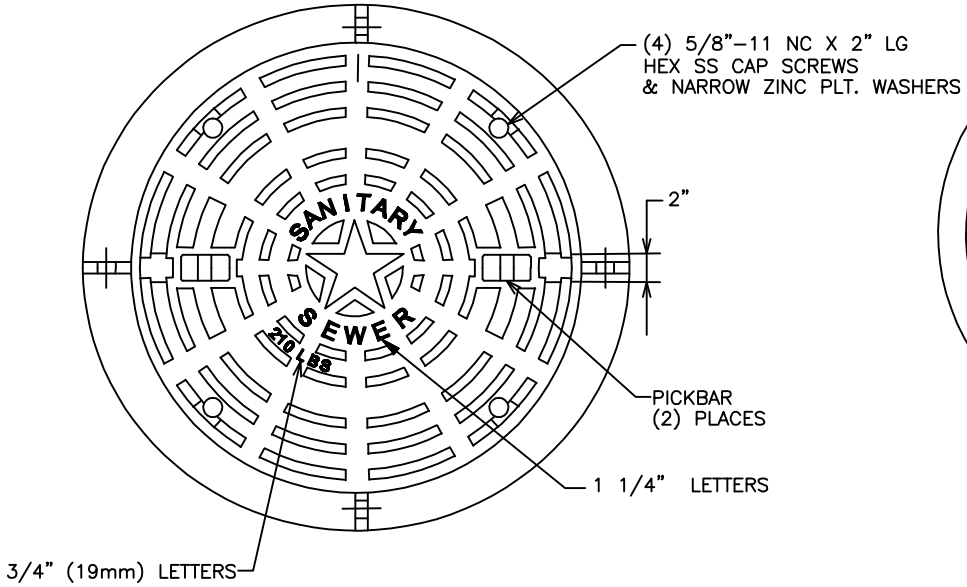

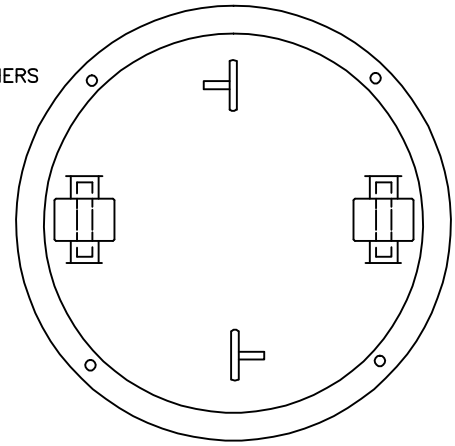

BOTTOM VIEW

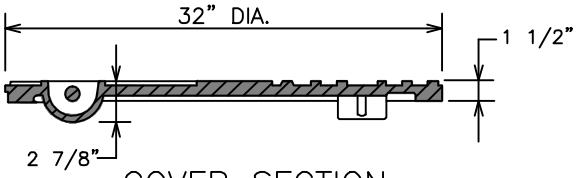

COVER SECTION

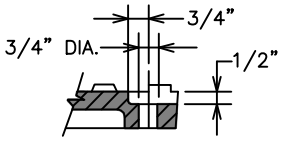

BOLT HOLE SECTION

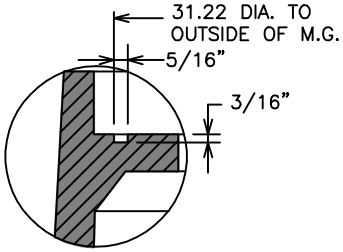

MACHINE GROOVE DETAIL

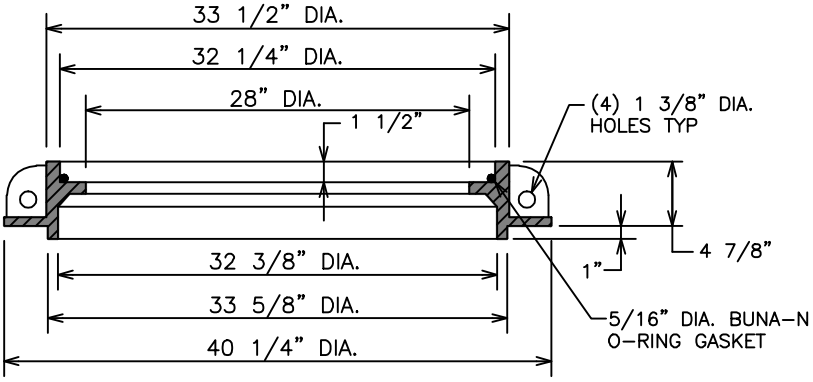

FRAME SECTION

NOTES:

1. LOAD RATING – HEAVY DUTY
2. MATERIAL AND ESTIMATED WEIGHT:
   COVER – DUCTILE IRON, ASTM A48 CL35 – 210 LBS.
   FRAME – DUCTILE IRON, ASTM A48 CL35 – 265 LBS.
3. WHEN BUILDING WITHIN A FLOOD PLAIN, WATER TIGHT MANHOLES WITH BOLTED AND GASKETED RING AND COVERS ARE REQUIRED.

SHEET 1 OF 1

APPROVED BY: Anthony Daniel, P.E.	DSAB APPROVED DATE: 8 September 2005	City of Temple	CITY OF TEMPLE ENGINEERING DEPARTMENT 3210 E. Avenue H, Bldg. A — TEMPLE, TX. 76501-8402
DRAWN BY: Chris Peal	FILE NAME: WATER TIGHT DUCTILE IRON MANHOLE FRAME & COVER.dwg		WATER TIGHT DUCTILE IRON MANHOLE FRAME AND COVER DETAIL — SCALE: N.T.S.